HOW DETECTORS WORK IN RADIO AND TELEVISION RECEIVERS

17FR-3

NATIONAL RADIO INSTITUTE
ESTABLISHED 1914
WASHINGTON, D. C.

STUDY SCHEDULE NO. 17

For each study step, read the assigned pages first at your usual speed. Reread slowly one or more times. Finish with one quick reading to fix the important facts firmly in your mind, then answer the Lesson Questions for that step. Study each other step in this same way.

☐ 1. **The Fundamentals of Amplitude Demodulation . . . . . Pages 1-8**

After reviewing some of the fundamentals of amplitude demodulation, you learn that detection or demodulation consists of two steps: rectification and signal separation. Then you study the two basic methods of signal separation and learn some of the requirements that must be met by practical detectors. Answer Lesson Questions 1 and 2.

☐ 2. **How Diode Detectors Work . . . . Pages 8-14**

The diode detector is by far the most widely used type today. Here is the basic theory of this detector—the factors determining its fidelity and signal-handling ability. Answer Lesson Questions 3 and 4.

☐ 3. **Practical Diode Circuits . . . . Pages 14-17**

Here are circuits that you will meet. A brief introduction to a.v.c. is given, followed by details on multi-function tubes. There is also an introduction to a television detector. Answer Lesson Questions 5, 6 and 7.

☐ 4. **The C-Bias or Plate Detector . . . . Pages 17-20**

The differences between linear and square-law detection explained here will show you why square-law detectors are no longer used as demodulators.

☐ 5. **Heterodyne or Beat Detectors . . . . Pages 21-22**

The heterodyne or "first" detector in a superheterodyne is an important stage. Instead of being a demodulator, however, it serves to form the intermediate frequency carrier from the incoming and local signals.

☐ 6. **Early Detector Types . . . . Pages 22-25**

This short section reviews crystal, grid leak, regenerative and other early detectors. Answer Lesson Question 8.

☐ 7. **Demodulators for F.M. Receivers . . . . Pages 26-31**

Although f.m. demodulators will be described in detail in another lesson, an introduction is given here so that you can compare them with a.m. demodulators. As you will see, they are exactly the same except that the f.m. demodulator must be preceded by a "discriminator" circuit to convert the f.m. signal into an a.m. type. Answer Lesson Question 9.

☐ 8. **Reviewing Methods of Providing C Bias . . . . Pages 31-36**

Now that you have studied most of the basic radio stages, this review of battery, self, and fixed bias will help you understand some of the many circuit variations you will meet. Answer Lesson Question 10.

☐ 9. **Mail Your Answers for this Lesson to N.R.I. for Grading.**

☐ 10. **Start Studying the Next Lesson.**

FM15M648 1948 Edition Printed in U.S.A.

HOW DETECTORS WORK IN RADIO AND TELEVISION RECEIVERS

The Fundamentals of Amplitude Demodulation

THE radio signals that are picked up by the antenna of a sound or television radio receiver are modulated radio frequency signals, which are produced at the transmitter by varying an r.f. carrier in accordance with a sound or picture intelligence signal. This results in an r.f. signal that has either an amplitude or a frequency variation corresponding to the intelligence signal. Notice that the intelligence signal, as such, no longer exists. It has been converted into a *variation* in the r.f. carrier, and this variation must be reconverted at the receiver into a duplicate of the original intelligence signal. This reconversion is called *demodulation* or *detection,* and is performed by a demodulator or detector stage in the receiver. Essentially, a modulated r.f. signal is fed into the demodulator, and a copy of the intelligence (audio or video) signal is obtained from it. (Superheterodyne receivers use an extra detector which serves another purpose; it is called a beat frequency or heterodyne detector. We will study first the demodulator, then this heterodyne detector.)

► As there are two systems of modulation (a.m. and f.m.) in wide use today, each requiring its own type of demodulator, we must divide detector circuits accordingly. In this lesson, we shall first describe the basic facts underlying *all* detectors. Then, most of the remainder will be on detectors intended for amplitude-modulated sound waves, although we shall briefly cover several basic f.m. demodulators as well as a basic television detector. (Later in the Course, there will be complete lessons on f.m. and television receivers; in those lessons, these demodulators will be covered in greater detail.)

► To understand more clearly just what is necessary for detection, let us review a few facts about the process of amplitude modulation before we take up a detailed study of how detectors work.

MODULATION PERCENTAGE

When the broadcast station to which a receiver is tuned becomes silent for a few seconds—say just after the station announcement—the r.f. *carrier* voltage that reaches the detector input will be unmodulated. The wave form of this unmodulated carrier is shown in Fig. *1A*. The peak value *N* in this drawing is constant and is a measure of the *intensity* level of the carrier.

If a pure sine-wave sound is picked up by the microphone after the silent period, the carrier will be modulated with this sine-wave signal and, in the process of amplitude modulation, it will have the wave form in Fig. *1B*. *M* represents the peak value of the sine-wave modulation signal; the ratio of M to N is a measure of the amount of modulation. In fact, M divided by N and multiplied by 100 gives the *percentage of modulation.* For example, if the peak carrier voltage level N in Fig. *1B* is 10 volts and the peak modulation voltage M is 4 volts, the percentage of modulation will be (4 ÷ 10) × 100, or 40%.

A line drawn through the peaks of the r.f. carrier cycles (such as the dotted lines in Figs. *1B*, *1C*, and *1D*) is called a *modulation envelope.* This envelope, which represents the manner in which the r.f. signal is being varied, is an *imaginary* line representing a variation of exactly the same frequency as the modulating sound. It therefore *represents* the intelligence signal that we want to obtain from the carrier.

When the carrier level at the transmitter is held constant and the modulation signal level is increased, the percentage of modulation increases. When the two voltages, M and N, are exactly equal, there is 100% modulation, and the wave form will be like that in Fig. *1D.* As we shall see, the greater the percentage of modulation of a transmitter for a given carrier level, the greater will be the demodulated output of the detector in a receiver. However, modulation percentages greater than 100% are prevented at the transmitter, because greater percentages cause interference with other channels and produce distorted signals.

► There are many different modulation envelope shapes since they depend on the modulation voltage and its variations. One possible envelope is shown in Fig. *2A.* If a signal with this wave form is fed into an r.f. amplifier stage having a stage gain of 3, the signal that enters the detector will be like that in Fig. *2B*, with three times the amplitude but exactly the same wave form as the input signal at *A.* Both carrier and modulation are amplified equally, so the percentage modulation remains unchanged after amplification.

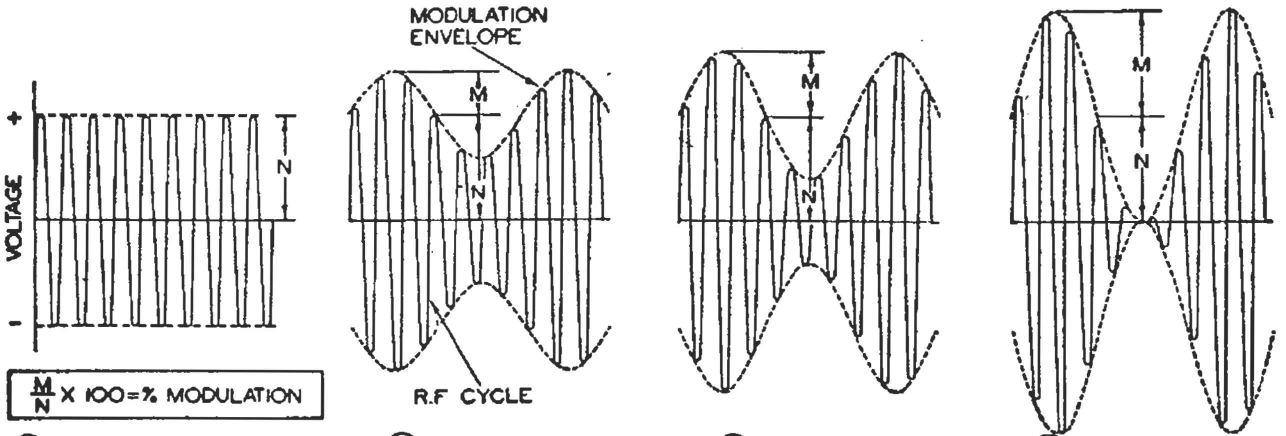

(A) UNMODULATED CARRIER (B) 40% MODULATION (C) 60% MODULATION (D) 100% MODULATION

FIG. 1. The unmodulated r.f. carrier at A takes on the wave forms at B, C, and D when modulated with a sine-wave signal at various modulation percentages. These waves can represent currents as well as voltages.

In the study of detectors, just as in the study of other radio circuits, it is much simpler to consider only sine-wave modulation signals and sine-wave carrier signals. If the detector will handle a sine-wave modulated signal without distortion, then it will handle the corresponding component of a complex wave equally as well.

Demodulation Steps. Now, let's

see just what a detector is required to do. We know that the intelligence signal exists only as an r.f. variation. Our detector circuit, then, must respond to the *variations* in the carrier. In other words, when we feed a varying r.f. signal into our detector, the output voltage of the detector must be proportional to the variations in the signal (that is, this voltage must follow the modulation envelope). The output of the detector will then be the intelligence signal that we want.

As you see from Fig. *1*, there are two modulation envelopes in the r.f. signal, one drawn through the positive r.f. peaks and the other drawn through the negative r.f. peaks. One is the exact opposite of the other and, as shown in Fig. *2*, an amplifier stage amplifies *both* of them. However, the demodulator must follow the variations of only one of the modulation envelopes, so we must get rid of one of them.

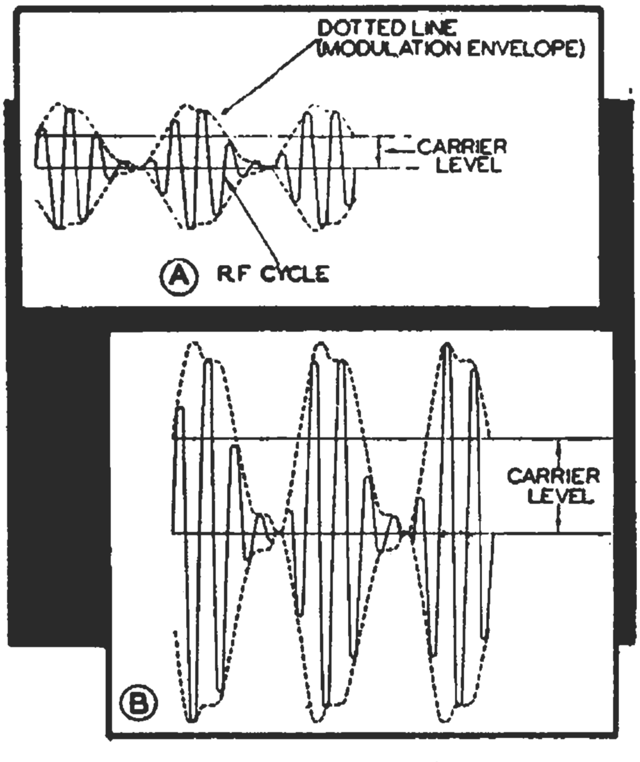

FIG. 2. One of the many possible wave forms of an r.f. carrier modulated with an actual sound signal (middle C as produced by a piano) is shown here before and after amplification.

We do so by *rectifying* the r.f. signal. By cutting off half of each r.f. cycle, we will obtain a series of pulsations having peak values that follow one modulation envelope. Then, we use a *filter* to obtain the intelligence signal from these pulses.

► To sum up: To get exactly the signal we want from an amplitude modulated r.f. carrier, we must do two distinct things to the r.f. signal. First, the incoming signal is rectified, so that half of each cycle is removed. The result is a series of r.f. current pulses that vary in accordance with the wave form of the intelligence signal. This rectified signal is then passed through a filter which, in effect, *separates* the desired intelligence from the undesired r.f. current. Keep these two steps (1, *rectification;* and 2, *signal separation*) in mind as you study the various types of detector circuits.

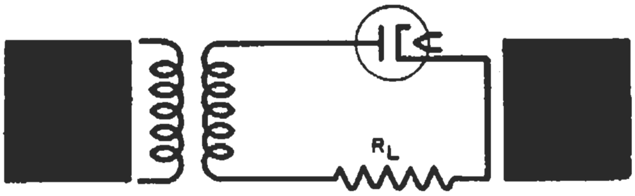

FIG. 3. A basic diode rectifier. This circuit performs one of the functions of a demodulator.

(Incidentally, some engineers call signal separation "restoration," since the intelligence signal is re-created from the r.f. pulses by the process.)

RECTIFICATION

Suppose we see what happens when we feed r.f. signals into a simple half-wave rectifier circuit like that shown in Fig. *3*. This circuit consists of a diode rectifier, a load resistance R_L, and a transformer through which we introduce the r.f. We will assume that the diode has a linear (perfectly straight) characteristic curve.

As you know from your previous

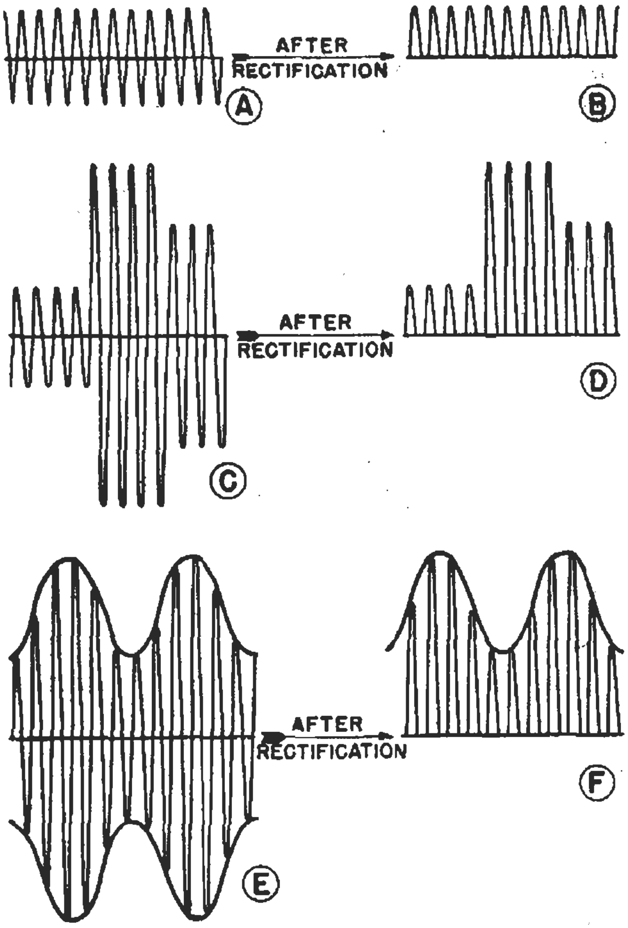

FIG. 4. The results of rectification of various signals are shown at B, D, and F.

study of half-wave rectifiers, if an unmodulated r.f. carrier (Fig. *4A*) is fed in, the plate current will consist of a series of pulses (Fig. *4B*).

Now, suppose we feed in a signal like that shown in Fig. *4C*. The peak value of this signal is varied suddenly; first it is like that in Fig. *4A*, then it is tripled in magnitude, and finally it is made double the peak value of the original. The rectified plate current (Fig. *4D*) will again consist of pulses, this time of three different sizes that correspond to the three peak values of the unrectified signal voltage.

► Now, let us feed an r.f. carrier modulated by an audio-frequency sine-wave voltage (Fig. *4E*) into our rectifier. This modulated carrier is much like the carrier in Fig. *4C*, except that its peak values vary more smoothly, following the shape of the modulating sine wave, instead of increasing or decreasing in sudden steps. When we rectify this sine-wave modulated signal, we get a series of pulses in the plate current (Fig. *4F*), varying in peak value as the peak value of the modulated r.f. signal varies.

Thus, passing an r.f. voltage through a rectifier will give a *series of half-wave r.f. pulses* with an envelope or outline that follows the shape of the envelope of the modulated signal.

► This series of pulses is still not the intelligence signal that we want, but an analysis of these pulses would show that we have a complex wave containing the desired signal. As shown in Fig. *5*, the pulses at *A* have at least three components: (1) a steady value of d.c. (Fig. *5B*); (2) an a.c. component that has the same frequency as the modulating sine wave (Fig. *5C*); and (3) an a.c. component that has the same frequency as the r.f. carrier

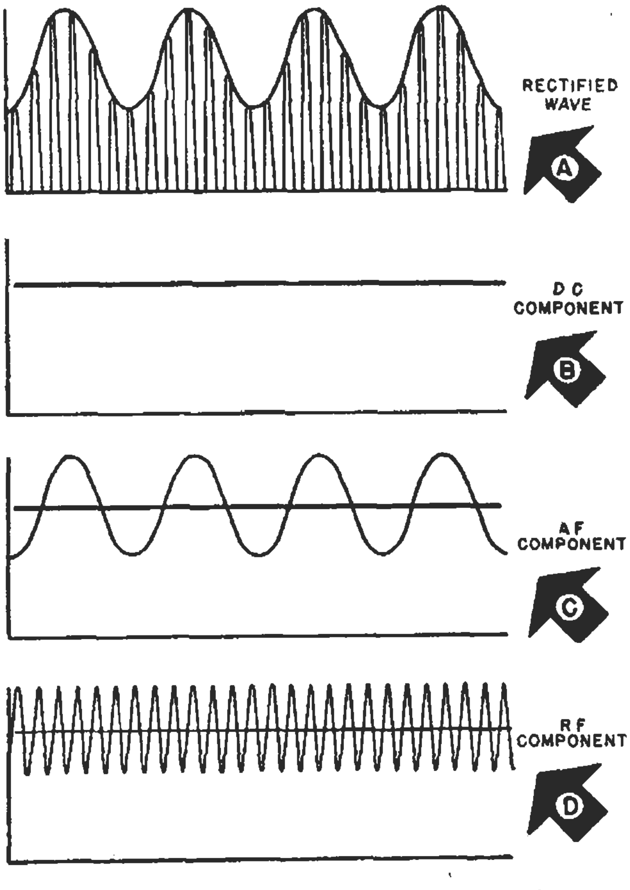

FIG. 5 A rectified wave has d.c., a.f., and r.f. components, as shown here.

(Fig. *5D*). (In addition, there will be a number of harmonics of the r.f. carrier that we can ignore.) Therefore, all we need now is some way to separate the component we want from all the others.

► The currents and voltages in an actual detector circuit are never this simple, principally because, as you will learn a little later, we seldom get perfectly linear rectification. Nonlinear rectification tends to distort the wave form of the intelligence signal, adding harmonics to it. However, here at the beginning of your study of detectors, we will assume that we have perfect conditions and will leave the distortions produced in practical circuits for discussion in later sections of the lesson.

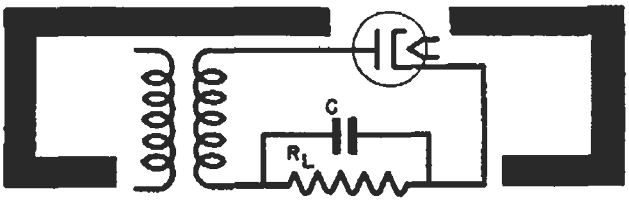

FIG. 6. This is a complete diode demodulator of a basic type. This circuit can rectify and separate the signal components so that the desired intelligence signal is available across R_L.

SIGNAL SEPARATION

The rectifier circuit shown in Fig. *3* has accomplished one of the steps of demodulation. We must now separate the components of the pulses so as to obtain the desired intelligence signal. This is easily accomplished by using a filter which, in its simplest form, consists of a condenser placed across the load resistor as shown in Fig. *6*.

This gives us the equivalent circuit shown in Fig. *7*. The pulses can be considered as coming from the source E, and as being fed through the plate resistance r_p to the combination of R_L and C. Since the operation of this circuit depends to some extent on whether the value of r_p is high or low, we'll study its workings under both conditions. First, let's see what happens when r_p is high.

The R-C Filter Action. If the value of r_p is high, and C is chosen to have a low reactance at the carrier (r.f.) frequency, then r_p and C will form an ordinary resistance-capacitance filter. Most of the r.f. component will be dropped across r_p and little will be left across C and R_L.

If C is properly chosen, it will have little effect on the intelligence frequencies, and none on the d.c. (assuming that there is no leakage), so these two components will appear across R_L. Of course, R_L and r_p form a voltage divider for these components, but if R_L is much higher in value than r_p, then most of these voltages will appear across R_L. (Since the condenser offers a lower impedance to the r.f. carrier than it does to audio frequencies, we may say that the condenser "by-passes" the r.f. pulsations around resistor R_L, leaving the d.c. and audio components.)

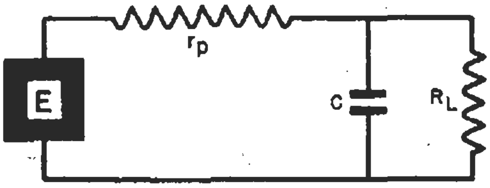

FIG. 7. The equivalent circuit for the signal separation function of a diode demodulator.

► The value chosen for C is important. The larger the capacity the better the r.f. components are filtered out, but C then filters out the higher intelligence frequencies as well. It is necessary to have C small enough so that the desired intelligence signal components will not be lost, even though this means less perfect r.f. filtering.

► When the filtering is accomplished as just described, by an R-C filter, the current through R_L is the *average* of the diode pulsations, as shown by the heavy line in Fig. *8*. The faithfulness with which this average value follows the peak value of the pulses determines the amount of distortion introduced by the detector, as we shall learn later.

The Condenser-Input Filter. When the value of r_p is very low, as it is in most diode tubes, we have to consider the action in Fig. *7* in a different manner. We now have to consider the tube as an electronic switch that completes the circuit through its low resistance whenever its plate is positive with respect to its cathode, but opens the circuit whenever the polarity is reversed.

Now, the condenser acts very much like the input condenser of a power-pack filter. It is charged up rapidly through the relatively low resistance of the tube when tube current flows, but, when the current is cut off, C must discharge through resistor R_L. The rate of discharge depends on the time constant of R_L and C and (since R_L is a high resistance) it is far slower than the charging rate. This rapid charge — slower discharge — action means that the condenser voltage tends to follow the peaks of the r.f. pulses, as shown in Fig. *9*. Hence, it almost exactly follows the peak value of the modulation envelope. Thus, it "smooths out" the r.f. pulses, leaving only the intelligence and d.c. components.

FIG. 8. How the voltage across R_L follows the average of the rectified pulses when the plate resistance of the circuit in Fig. 7 is high.

As the condenser voltage is also the voltage across R_L, the load voltage also follows the intelligence signal instead of the r.f. signal—in other words, we have signal separation.

► It is usually better to have r_p low in value, rather than high. If r_p is low in value, the load voltage follows the peaks of the pulsations, and we obtain a higher voltage across R_L. Further, as you will see a little later, we can get less distortion when r_p is low.

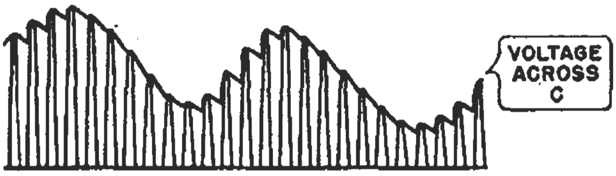

FIG. 9. A low value of plate resistance in the circuit in Fig. 7 permits the R_L voltage to follow the peaks of the rectified pulses.

THE DETECTOR OUTPUT

After signal separation — whether we follow the average or the peaks, or have a combination of the two actions —we will have across R_L an intelligence signal voltage, a d.c. voltage, and perhaps a small r.f. ripple. The signal across R_L is then fed to a low frequency amplifier—usually through a coupling condenser that blocks the d.c. component, passing only the desired intelligence signal (and a small r.f. ripple which we can ignore). As we shall see later, the d.c. component of the signal across the detector load is useful for control purposes.

► Incidentally, a certain amount of signal separation can occur in the low-frequency amplifier. However, if we apply high r.f. voltages to the low-frequency amplifier it may drive the first audio tube off the straight portion of its characteristic. This will introduce distortion, so we wipe out as much r.f. as possible before applying the signal to the low-frequency amplifier.

► This completes the story of the

basic steps of demodulation. However, there are many characteristics of detectors that we have not yet touched upon—distortion, for example. Suppose we now find out about some of the requirements placed on detectors, then go on to a study of typical circuits.

DETECTOR REQUIREMENTS

There are three important performance characteristics on which detectors are rated: *sensitivity, fidelity,* and *voltage-handling ability* (sometimes called power-handling ability).

Sensitivity. Radio men are always interested in how much of the intelligence signal voltage they can obtain from a detector when it is fed an r.f. voltage at a definite carrier level and a given percentage of modulation. The sensitivity rating of a detector gives this information, for it is the *ratio of the intelligence voltage output to the modulated r.f. voltage input.* The more sensitive a detector is, the higher will be its output voltage.

With modern high-gain circuits, we are able to get more than enough amplification, so that we can afford to use detectors having no gain. However, in the early days of radio, before high-gain tetrode and pentode tubes were developed, high sensitivity was one of the most important requirements of a detector.

► We might take the time to cover the history of detectors briefly and see how this requirement has changed. The diode tube was used as a detector as soon as it was developed, but it was dropped after the invention of the triode, because triode detectors gave both amplification and detection. The triode was used first in a form of the C-bias circuit, but this was replaced soon by the grid leak-condenser square-law detector circuit which gave a high output (along with severe distortion). When even more gain was sought, regeneration was added to this circuit. (These circuits will be studied later in this lesson.)

With the development of stable r.f. circuits and more powerful transmitters, there was less need for high gain, and the public demanded better fidelity. First regeneration was dropped, then the linear C-bias detector was developed. This type provided gain and improved fidelity.

Today, the diode has replaced both the grid leak-condenser and the C-bias types, as there is no longer any need for gain in the detector stage. These older types are of interest to us only because receivers using them are still being serviced. (The early crystal detectors are not found in broadcast receivers except in the simplest types intended for school-boys. However, a modified type of crystal detector is now coming into use as an ultra-high frequency detector.)

Fidelity. A transmitter is considered to have high fidelity when the envelope of the modulated-carrier current is a true reproduction of the intelligence signal. The receiver r.f stages can alter the wave, particularly by side-band cutting, so it is only fair to consider detector fidelity in terms of the signal fed into it, rather than in terms of the radiated wave. Hence, we compare the wave form of the output of the detector with that of the envelope of the modulated signal fed into it; the more nearly these two wave forms correspond, the better is the *fidelity* of the detector. High fidelity—in other words, lack of distortion—is obviously desirable in a detector.

Voltage Operating Range. The range of input signal voltages over which a detector will operate with satisfactory fidelity is by no means unlimited. Some detectors can handle only weak carrier signals without distortion, while others will distort on weak carriers yet work perfectly well on strong carriers. The percentage of modulation of the incoming signal also limits the operating range of a detector; some circuits work well at high percentages of modulation, while others do not.

► Let us now study some of the practical detector circuits, and learn how they compare in their performance characteristics.

How Diode Detectors Work

We used a diode detector in the preceding section to explain the fundamentals of detection. However, in that preview, we made a number of assumptions and told only the basic story. We'll now study the details of diode detector operation.

R.F. LOADING

Fig. *10* shows a diode detector circuit that is typical of those in modern superheterodyne receivers. The i.f. transformer feeding the detector is almost always tuned, so we can represent it by L_1-C_1 and L_2-C_2. The intelligence signal developed across the load R_L is fed through coupling condenser C_4 to the low-frequency amplifier.

The resonant circuit L_2-C_2 acts as the source, and must supply power because the diode tube passes current whenever its plate is positive with respect to its cathode. This "loading" reduces the tuned circuit Q because the effect is that of connecting a resistance across the L_2-C_2 terminals. As a reduction in Q reduces both the output and selectivity, we cannot permit too much loading.

As shown in Fig. *11*, the diode plate resistance r_p and the diode internal plate-to-cathode capacity C_{PK} form a parallel group which is in series with the R_L-C_3 group, with the entire combination connected across the terminals of L_2-C_2.

We can assume that, at the carrier frequency, the reactance of C_3 is very low so that R_L is effectively shorted for r.f. This leaves r_p and C_{PK} across the resonant circuit. We can dismiss the effect of C_{PK} because it serves only to detune the resonant circuit and we can adjust C_2 to compensate for it. Hence, the actual loading depends on the value of r_p.

Fortunately, the effective value of r_p is increased and the loading is reduced by the action of C_3 and R_L. You know that both the intelligence frequency component and the d.c. component are stored in C_3, with the polarity shown in Fig. *10*. Hence, we have *two* voltages applied to the diode —the incoming signal and the voltage stored in C_3. Since the C_3 voltage is only slightly less than the peak value of the incoming signal, and since its polarity tends to make the diode plate negative, the tube can conduct only during the relatively short time that the incoming signal is able to overcome the C_3 voltage and make the plate positive. The plate current becomes a series of short, high pulses having a low average value.

Increasing the values of C_3 or R_L will increase the time constant and will cause the C_3 voltage to follow the peak value of the incoming signal even closer. This reduces the plate current and the loading even further. However, as we will show, this increase in time constant lessens the ability of the circuit to pass the higher intelligence frequencies; this sets a limit to the values we can use. For this reason, we must accept some loading when we use a diode detector. This is not too serious since modern i.f. amplifiers usually provide enough selectivity and gain to make up for most of the effects of loading.

Service Hint. Notice the importance of condenser C_3 to the r.f. circuit. If C_3 opens, several things happen. The shunting effect of the internal tube capacity is reduced and, in addition, the loading on the tuned circuit is changed. More important is the fact that there is now a voltage divider (the tube and R_L) for r.f., and a large portion of the signal voltage will be dropped across R_L instead of being applied to the tube. As a result of this reduced r.f. voltage across the tube, the plate current pulses will be far smaller, so the output will be reduced greatly. And, of course, the absence of C_3 means that the detector output is now a series of r.f. pulses, and signal separation can occur only in the low-frequency amplifier.

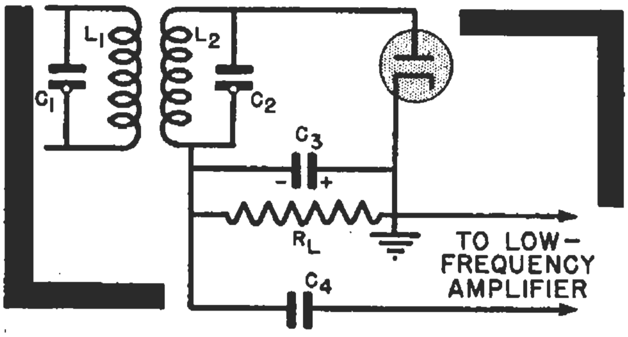

FIG. 10. The input and output connections of a diode demodulator.

► When you find that the output from a detector is far below normal, you should first suspect a defective diode tube, then check the alignment. Keep C_3 in mind, however, as it may be defective.

FIDELITY CONSIDERATIONS

Naturally, we are always interested in how faithfully a detector reproduces the original audio signal — or, to put it another way, how much distortion is present in the output of a detector. There are two possible causes of distortion in the output of the diode detector we've just studied: (*1*) there will be distortion if the diode is not perfectly linear in its operation, and (*2*) there will be distortion if all the audio signal is not reproduced across the load. The first of these is primarily caused by the tube, while the second is primarily a function of the load and r.f. filter.

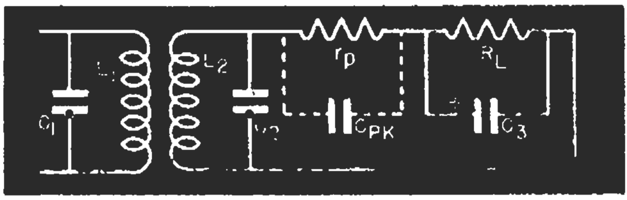

FIG. 11. How the diode circuit can act as a load on the input resonant circuit.

NON-LINEAR TUBE CHARACTERISTIC

It's easy to see why a tube that is not linear in its response will cause distortion. A diode tube has linear response if its plate voltage-plate current characteristic is a straight line, because then equal changes in plate voltage will produce equal changes in plate current. The response of such a tube to a modulated r.f. carrier is shown in Fig. *12*. As you can see from this figure, the envelope of the rectified pulses is exactly like the envelope of one half of the input signal. This means the a.f. current produced by the tube has the same wave shape as the modulation envelope, and, if the voltage across the tube load has the same form as the tube current, there will be no distortion caused by the tube.

If the tube characteristic is not linear, but is instead curved like that in Fig. *13*, then the envelope of the rectified pulses is no longer precisely like the carrier envelope; therefore, the a.f. voltage developed across the load resistor will not have the same form as the original audio. Distortion will have been introduced by the nonlinear response of the tube. This distortion consists principally of the addition of *even* (the second, fourth, etc.) harmonics to the original signal.

Modern diodes have relatively straight characteristics, and the use of high load resistor values tends to straighten them out further. Even so, there is usually some curvature near the zero-current point of the curve. Let's see what this can cause.

MODULATION PERCENTAGE AND SIGNAL INPUT LEVEL

The amount of signal and the percentage of modulation have much to do with how much distortion may occur in diode detectors.

As we have shown, most diodes have characteristics that are relatively straight except at the bottom, where they curve like the characteristic in Fig. *13*. Such a tube will give undistorted response as long as the modulation envelope (the peaks of the r.f.) swings over the linear part of the characteristic, but will have a somewhat distorted response if the modulation envelope swings down over the curved part of the characteristic.

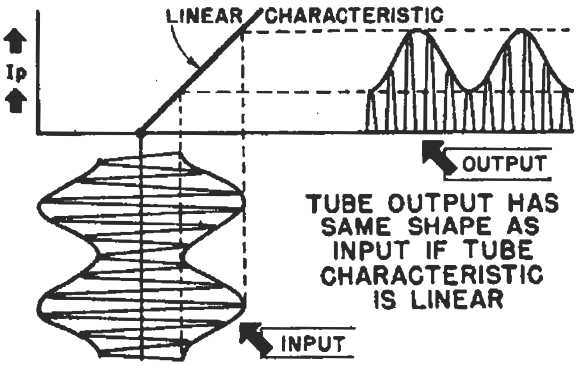

FIG. 12. The output follows the input exactly when the detector characteristic is perfectly linear.

Now, the percentage of modulation partly determines whether or not the envelope will reach the curved part of the characteristic. Assuming we have only 40% modulation, like the wave in Fig. *1B*, and the signal is fairly strong, the envelope does not reach the curved section at the bottom of the characteristic, and the detector output therefore will be undistorted.

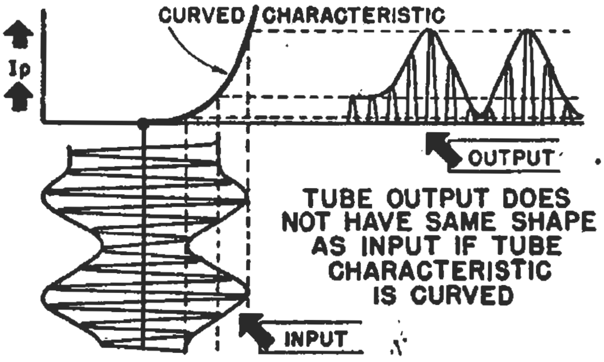

FIG. 13. A curved tube characteristic causes distortion.

If, however, the carrier is 100% modulated, as in Fig. *1D*, the modulation envelope cannot help but swing down over the curved part of the characteristic. Part of the wave will then be distorted.

► The strength of the signal determines how bad the distortion will be. If the signal is weak, even the highest signal peaks will not go very far up on the characteristic. Consequently, the modulation envelope will swing mostly over the curved part of the characteristic. There may be severe distortion, even if the carrier is only 40% or 50% modulated. On the other hand, if the signal is very strong, practically all the modulation envelope will swing over the linear part of the characteristic. Even if the modulation is 100%, only a very small part of the output will be distorted. Thus, a diode detector produces the least distortion when it is fed a strong signal.

This is a very important fact. Broadcast stations try to use a high percentage of modulation (up to 100%), which, as you just learned, will cause considerable distortion in a diode detector unless the signal is strong. Obviously, then, it is desirable to build up the signal as much as possible before applying it to the diode. This is one of the reasons that the diode detector was not widely used until high-gain tetrode and pentode tubes were developed for use in r.f. and i.f. stages preceding the detector.

Power Detectors. Today, the diode is commonly used as a power detector. This is simply a detector that can handle very large r.f. voltages (from about 5 to 50 volts) without appreciable distortion.

THE R-C TIME CONSTANT

Distortion will be introduced also if the voltage developed across the load resistor does not have the same form as the envelope of the rectified current pulses. This distortion is caused primarily by the time constant of the r.f. filter condenser and the load resistance.

To see what will happen, let's assume that the time constant is too long to follow the modulation frequency shown by the dotted line in Fig. *14A*. As you will notice, the condenser voltage follows the peaks satisfactorily between points *X* and *Y* of this figure, where either the carrier is not changing or the modulation is swinging positive. When the modulation signal swings in the other direction, however, the condenser voltage decreases along the heavy line between points *Y* and *Z* instead of following the dotted line. This means that we get the output wave shown by the heavy line in Fig. *14B* instead of the sine-wave signal shown by the dotted line. Higher modulating frequencies than that shown are followed even less well; they are not only distorted, but are also reduced in amplitude. Thus, too high a time constant causes two kinds of distortion: some frequencies are not reproduced as well as others (this is called frequency distortion); and the shape of the output wave is changed, showing that harmonics have been introduced (amplitude distortion).

FIG. 14. If the R-C time constant is too high, a distortion known as "clipping" occurs, as illustrated here.

We are therefore definitely limited as to the time constant we can use. The values of R_L and C_3 must be made sufficiently small to allow the condenser to discharge fast enough to follow the highest frequency that we want.

► In practice, design engineers usually choose the value of *C* first, using a value about 5 to 10 times the tube capacity C_{PK} to minimize the r.f. loss. Then, with this value fixed, they choose the highest value of R_L that will give the desired fidelity.

Fig. *15* gives examples of the attenuation introduced by different values of R_L when the capacity is fixed at 250 $\mu\mu$fd. You can see that smaller values of R_L give less frequency distortion. (However, small values of R_L permit more loading on the resonant circuit and more amplitude distortion in the tube.)

► To have high-fidelity detection, we must reduce to negligible values both distortion produced by the tube and distortion produced by the load. Unfortunately, the measures we can take to correct the first tend to accentuate the second. That is, a diode is more nearly linear in its response when the load used with it has a high ohmic value, but this means that the time constant (*R* times *C*) of our load circuit will be rather high; as you just learned, this tends to cut off the higher audio frequencies.

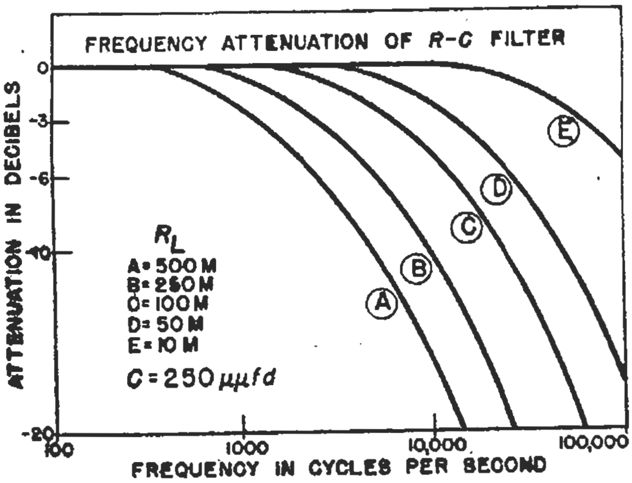

FIG. 15. How increasing the load resistance causes the high frequency response to fall off (a form of frequency distortion).

R.F. Filters. When the r.f. by-pass condenser (C_3 in Fig. *10*) is the only r.f. filter, its capacity must be kept high so that a minimum of r.f. voltage will be applied to the low-frequency amplifier. One way to keep this r.f. voltage low, and at the same time use a smaller capacity, is to use a complete r.f. filter as shown in Fig. *16*. Here, C_2 acts as an input filter condenser, while the R_1-C_3 combination forms a standard R-C filter section. (An r.f. choke coil can be used in place of R_1, but it is less expensive to use the resistor and the results are just as good.)

The improved filtering given by the R-C filter makes it possible for condensers C_2 and C_3 to be smaller. In fact, their sum can be less than the value needed for C_3 in Fig. *10*. This means that the higher intelligence frequencies are not cut off as much. This scheme allows higher fidelity, and permits the use of load values up to 500,000 ohms.

► It is possible to reduce the distortion in a diode detector stage to a very low value by selecting a tube that has a nearly linear characteristic and by choosing the values of the load with care. (The human ear will usually put up with more frequency distortion than amplitude distortion, so usually the load resistance is kept fairly high to reduce the amplitude distortion in the tube.) As a practical matter, this means that a diode detector can have virtually perfect fidelity, because even a highly trained ear cannot distinguish small amounts of distortion.

ISOLATION OF VOLUME CONTROLS

Now, let's take up a variation in the connections that you will encounter—one that arises because many receivers use volume controls as the diode detector load. The control is used to vary the input voltage fed to the low-frequency amplifier.

A volume control has a movable slider which will eventually wear out the resistance element. The resulting poor contact will produce noise. These controls become noisy much more quickly when d.c. current flows through them. As you know, a d.c. current flows through the diode detector load resistance because the filter circuit removes only the r.f. pulses and leaves the low-frequency and d.c. components of the signal. To increase the life of the volume control, some manufacturers isolate the control from this d.c. current.

Fig. *17* shows the usual connection with the volume control R_c used as a diode load. The coupling condenser C_2 feeds the low-frequency component of the signal to the low-frequency amplifier, blocking out the d.c. from the amplifier input but not from the volume control.

By adding another blocking condenser and another resistor, as shown in Fig. *18*, it is possible to keep d.c. out of the volume control.* Notice that the added resistor R_1 is used as the diode load resistor, and the additional coupling condenser C_3 passes only the low-frequency signal to the volume control R_c. From here, condenser C_2 passes on the low-frequency signal to the low-frequency amplifier.

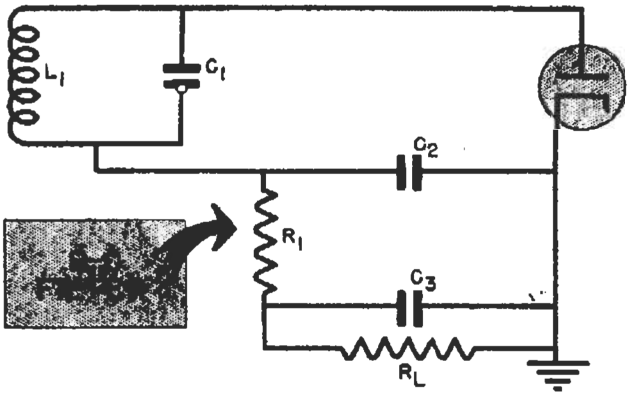

FIG. 16. The C_2-R_1-C_3 filter shown here is found in most receivers, since it reduces the r.f. component without so much loss of the higher intelligence frequencies.

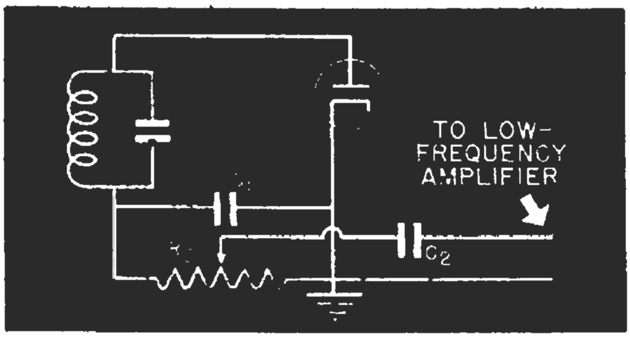

FIG. 17. Volume controls are frequently used as the detector load, connected in the manner shown here.

With this arrangement, only the low-frequency signal flows through R_c. The d.c. in the diode circuit flows through resistor R_1, not through the volume control.

When the volume control is used as the detector load as in Fig. *17*, its value is chosen just as that of a fixed load resistor is.

► When the control is isolated as in Fig. *18*, however, it is desirable to use a higher resistance control than that used in Fig. *17*. As you know, the reactances of C_3 and C_2 are negligible at the middle audio frequencies. This means that, as far as a.c. is concerned, R_c (and any resistance between the output terminals) will be effectively in parallel with R_1. Since two resistors in parallel have a total resistance that is lower than either of them has individually, there must be an increase in the values of R_c and R_1 to make their total resistance higher, or we must accept a lower a.c. load resistance in the diode circuit.

A lower a.c. load would mean that

FIG. 18. There will be far less noise and longer control life when the volume control is isolated so that d.c. current does not flow through it.

---

*Of course, the circuit shown in Fig. *17* costs less than the set-up in Fig. *18*. That is why the former is so widely used.

less of the signal would be developed across the load, and also that a certain amount of amplitude distortion would occur.

► As a practical case, the volume control resistance in Fig. *17* is commonly 250,000 ohms. However, if the volume control is isolated for longer life by using the circuit in Fig. *18*, then resistor R_1 may be about 250,000 ohms and the volume control R_c may be between 500,000 ohms and 1 megohm. (The additional coupling condenser C_3 is usually from .05 mfd. to .1 mfd.)

Practical Diode Circuits

In most practical diode detectors, the d.c. voltage developed across the load resistor is used for control purposes. A typical circuit is shown in Fig. *19*.

In this figure, tube VT_2 is the diode detector. Its circuit and action are precisely like the diode we just described.

The amplifier stage using VT_1 is also standard, except that its grid return lead has R_2 in it and is connected to the diode load resistor R_1 instead of going directly to ground. Tracing from the amplifier cathode (point *1*), you see that the bias voltage developed across R_g is applied to the grid through R_1 and R_2. (Trace from point *2* through the chassis to point *3*, then to points *4* and *5*.)

The amplifier stage uses a variable-mu or super-control tube, so the amplifier gain will vary with the bias. The gain is maximum when the bias is minimum. In Fig. *19*, the gain will be maximum when no signal is tuned in, for then the only bias is the self-bias developed across R_g.

However, when a signal is received, a d.c. voltage will appear across R_1 with the polarity shown in Fig. *19*. (Check the polarity by tracing the direction of electron flow in the diode circuit.) This voltage, whose value depends upon the strength of the carrier voltage applied to the diode, *adds* to the R_g bias voltage (trace from point *1* to point *4*: the two voltages are in series, connected so that their voltages add). This increase in bias reduces the gain of the amplifier.

It is possible to choose part values for these circuits that will keep the

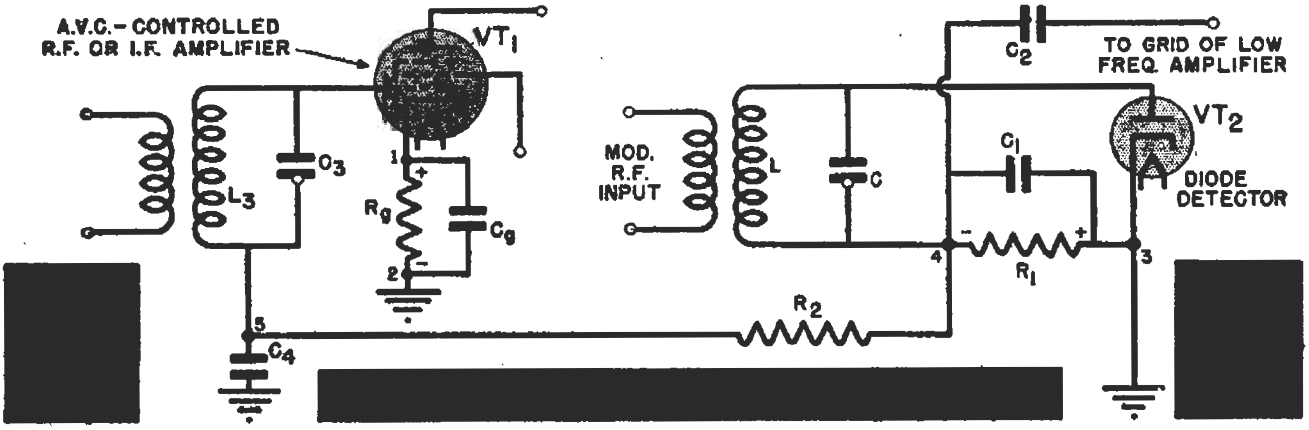

[redacted]
[redacted]
[redacted]

FIG. 19. A basic a.v.c. circuit.

level of the signal applied to the diode at a nearly constant value. If a strong signal is received, the d.c. voltage drop across R_1 will be high; this will increase the bias on the amplifier tube and reduce its gain sufficiently to bring the signal applied to the diode down to the desired level. Conversely, the d.c. voltage across R_1 will be low when a weak signal is received; this will decrease the bias on the amplifier tube and increase its gain, and thus bring the signal applied to the diode up to the desired level. This action will keep the output volume of the set practically constant on local and near-distant stations. That is why it is given the name of "automatic volume control" (abbreviated *a.v.c.*).

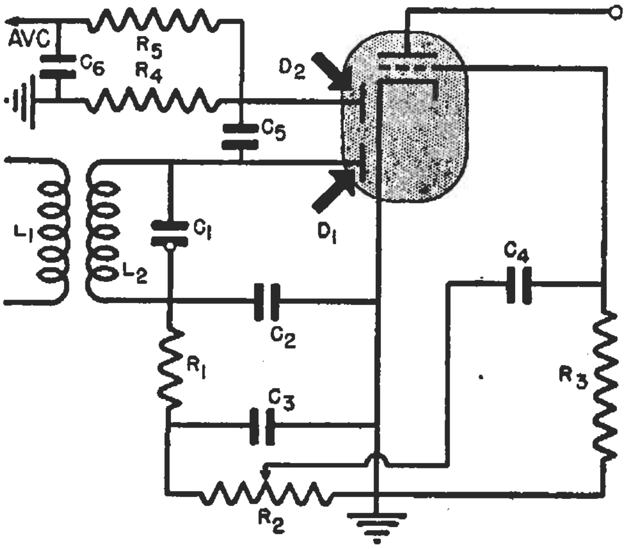

FIG. 20. How a multi-section tube can be used as: demodulator; a.v.c. diode; and first audio amplifier.

► Resistor R_2 and condenser C_4 serve a very important purpose in connection with a.v.c. action. Remember that the voltage across R_1 is made up of two components, a d.c. voltage whose value varies with the carrier level, and a low-frequency a.c. voltage corresponding to the intelligence signal. Clearly we cannot allow the a.c. component to bias the grid of the amplifier, for it would modulate the amplifier input.

R_2 and C_4 form an R-C filter section that keeps the a.c. voltage developed across R_1 from reaching the amplifier. (This filter has no effect upon the d.c. component of the voltage across R_1, for no direct current is drawn through R_2 by the grids of a.v.c.-controlled tubes.)

► A later lesson will treat a.v.c. systems in detail. Here we have presented the subject briefly to give you some idea of what a.v.c. is and how it is secured from a diode detector. The fact that we can get this control voltage from a diode is one of the reasons for the great popularity of this tube.

MULTI-FUNCTION TUBES

Tubes with twin diode sections and a triode or pentode section are often used in radio receivers to secure detection, a.v.c. voltage, and amplification from a single tube. There are many ways of using a three-in-one tube such as this; Figs. *20* and *21* show two of the more common methods.

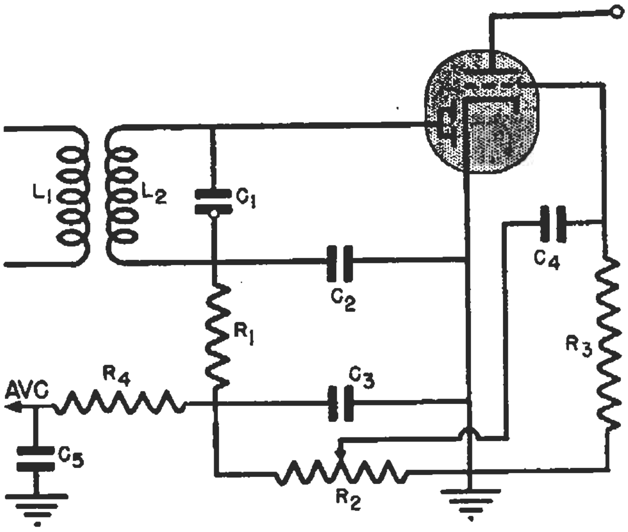

FIG. 21. Another multi-section tube connection in which the diodes are connected in parallel and a.v.c. voltage is obtained from the demodulator circuit.

► In many of the early a.v.c. circuits the required bias voltages were applied through the a.v.c. network, making it desirable to use a separate diode for production of the a.v.c. voltage. Fig. *20* shows a circuit in which diode D_1 is the detector, while diode D_2 is used as a rectifier for the production of the a.v.c. voltage.

When a signal flows through L_1, a corresponding signal voltage is induced in L_2, which is tuned by condenser C_1. This applies an r.f. voltage directly to diode D_1. The pulses are fed through the r.f. filter C_2-R_1-C_3 so that only the d.c. and a.f. components exist across the load resistance R_2. The low-frequency component is passed on through C_4 to R_3, where it is applied to the grid of the triode section of the multi-function tube. The triode then acts as the first audio amplifier.

Condenser C_5 is used to couple some of the r.f. potential into the circuit of diode D_2. As a result of rectification, a pulsating voltage exists across R_4, which is filtered of all except its d.c component by the filter composed of resistor R_5 and condenser C_6. This d.c. component is then applied to the a.v.c.-controlled tubes.

► In sets in which no additional biases are applied to the controlled stages, the same type of tube can be used with the extra diode connected in parallel with the detector diode, as shown in Fig. *21*. The parallel diodes act as one diode with only half the usual plate resistance. Although this increases the loading on the tuned circuit, it provides a greater output.

The a.f. component developed across R_2 in Fig. *21* is passed through C_4 to the grid of the triode section. The d.c. component, fed through R_4, gives the a.v.c. action. The filter R_4-C_5 removes the a.f. and r.f. components.

TELEVISION DEMODULATORS

Fig. *22* shows a typical television detector. This must handle a very wide frequency band, as the video signal includes frequencies from 10 to 4,000,000 cycles. To get the wide frequency range, very low load resistances—usually from 5000 to 25,000 ohms—are used. Two diodes in parallel are used to keep the output voltage as high as possible (these can be the two elements of a dual-diode tube).

The r.f. filter capacity must be kept small to handle the wide frequency range. As a matter of fact, a condenser may be unnecessary, for sufficient filtering capacity may be provided by the shielded lead going to the grid of the first picture amplifier tube. (Notice that there will be a capacity between the lead and its shield, which is effectively across the load resistance.)

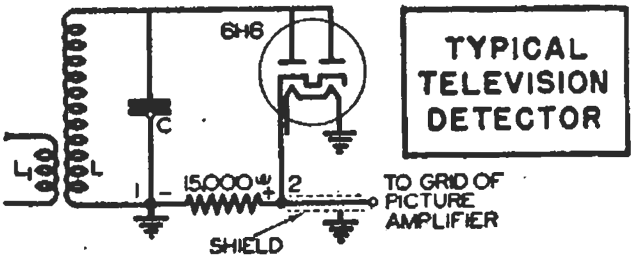

FIG. 22. A typical television demodulator.

► In the circuit shown in Fig. *22*, terminal *1* of the load resistance is grounded instead of terminal *2*. It is just as common to ground terminal *2* and to take the signal from terminal *1;* the particular connection used depends upon the polarity of the signal wanted. (The television signal must be applied to the cathode ray tube with the proper phase, so that increases in brightness will cause brighter spots on the cathode-ray tube screen. As each amplifying stage reverses the phase by 180°, the number of video stages determines which detector connection will give the right polarity.) The subject of television detectors will be covered in another lesson, but you can see now that conventional circuits are used, the major difference being the use of different part values.

PUSH-PULL DETECTOR

The circuit in Fig. *23A* is a push-pull, or full-wave, detector. When point *2* is positive with respect to point *1*, the diode D_1 passes current while D_2 is cut off (because point *3* will then be negative with respect to point *1*). On the next half-cycle, the polarities of points *2* and *3* are interchanged, and the opposite action occurs. Hence, the diodes alternately pass pulses of current through the load resistor R_1. This is the same action as is obtained in full-wave rectification, which, as you know, doubles the frequency of the applied a.c. voltage. (A full-wave power-pack rectifier produces 120 cycles from a 60-cycle power line frequency.) In other words, if the r.f. carrier has a frequency of 400 kc., full-wave detection produces r.f. pulses with a frequency of 800 kc.

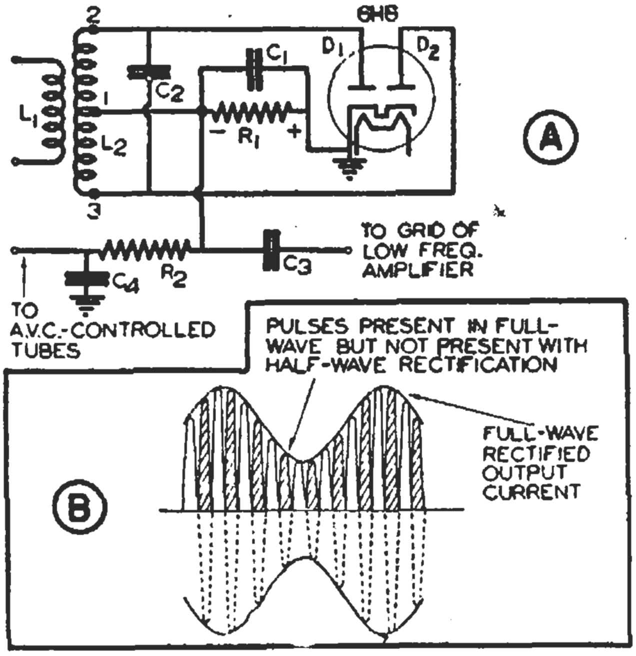

FIG. 23. A full-wave diode demodulator.

Doubling the frequency of the r.f. pulses across R_1 does not greatly affect the envelope shape (see Fig. *23B*) It does, however, permit a decrease in the size of condenser C_1, the r.f. filter because at higher frequencies, condenser reactances are lower. Thus, a smaller condenser can do the filtering.

Since a reduced value for C_1 gives greater fidelity, the push-pull detector has been tried in some high-fidelity receivers. It is not used very often today, however, except for an interesting variation of this circuit that is employed as the demodulator in f.m. receivers.

The C-Bias or Plate Detector

In each of the diode circuits we have discussed so far, none of the tubes is powered by a B supply. The only power fed them (other than filament-heating power) is the modulated carrier voltage. Consequently, our circuits have given us no amplification, for, as you know from your earlier studies, a tube amplifies only if the input voltage is used to control the much larger voltages furnished by a B supply.

This lack of amplification is no problem in modern radios, for we can produce all the gain we need by using amplifier stages before and after the detector. In earlier days, however, when high gain was not so easy to achieve, the diode detector was not in general use; instead, engineers developed circuits that permitted both detection and amplification in the same tube.

LINEAR C-BIAS DETECTOR

The linear C-bias detector is really a vacuum tube amplifier stage supplied with a C bias almost large enough to cut off plate current. It is operated with a plate voltage and a load resistance value which will make the dynamic E_g-I_p curve of the tube practically straight or linear. (The curve is similar to the linear type shown in Fig. *12.*) Automatic C bias, supplied from a resistor in the cathode lead, is almost universally used.

Triode Circuit. An early linear C-bias detector circuit using a triode tube is shown in Fig. *24*. Cathode resistor R_c provides an automatic C bias that is high enough to reduce plate current almost to zero when there is no r.f. input signal. When a modulated r.f. signal is applied to L_1, a voltage of similar wave form is induced in coil L. This voltage receives a resonant step-up from the L-C resonant circuit and is then applied to the grid of the tube.

Since the tube is biased almost to cut-off, plate current flows only when the r.f. input voltage is going through a positive half-cycle. Also, since the dynamic E_g-I_p characteristic of the tube is approximately linear, these plate current pulses have the same form and envelope as the positive half of the input r.f. voltage. Thus, the output of the triode is like that of the diode we have already studied, except that in this new circuit the pulses *have been amplified by the tube.* In other words, the tube amplifies in a normal manner, while detection occurs because the grid is biased so near cut-off that only half of each signal pulse causes plate current to flow.

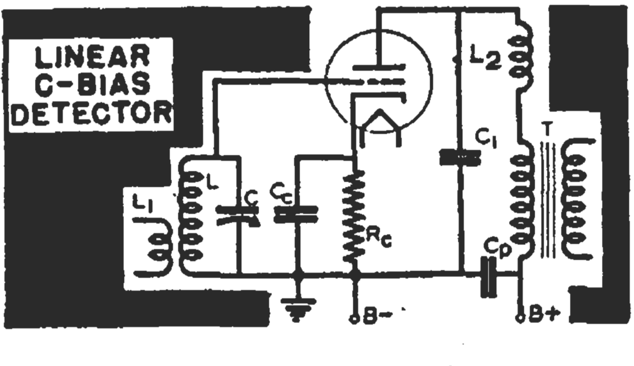

FIG. 24. The linear C-bias detector.

The primary of the audio transformer T is the load, in place of the resistor used in our previous diode detector examples. Condenser C_1 is the r.f. by-pass condenser used for signal separation. In addition, the r.f. choke L_2, together with the distributed capacity in the transformer primary, forms a low-pass filter that assists in keeping r.f. from the load.

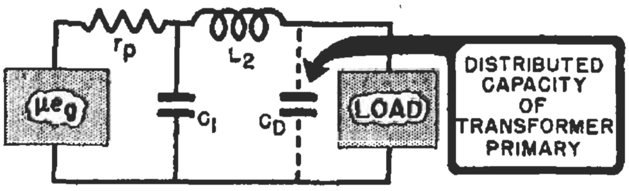

FIG. 25. The equivalent signal-separation circuit of Fig 24.

The equivalent r.f. filter circuit is shown in Fig. *25.* We have a filter r_p-C_1 and another filter L_2-C_D. This circuit follows the average of the plate current pulses rather than the peaks, so the load current varies in the manner shown in Fig. *8.*

This circuit has the advantage of tube amplification and, as there is no grid current, it does not load the resonant circuit. However, it does not provide a d.c. voltage for automatic volume control. Also, there are limits to the input signal it can handle; if the signal exceeds the bias, so that the grid is driven positive, the plate current pulses will be distorted.

Pentode Circuit. Another linear C-bias detector circuit is shown in Fig. *26*. This uses a pentode tube, and gives relatively high output voltages even for weak input signals. A similar circuit is found today in inexpensive t.r.f. receivers of the a.c.-d.c. type.

While this circuit looks more complex, its operation is much the same as that of the triode circuit in Fig. *24* The control grid is biased practically to cut-off by plate current flowing through bias R_c, which is by-passed by C_1. R.F. filtering is obtained from C_2-L_2-C_3, which work with r_p to form the filter shown in Fig. 25. The a.f. voltage is developed across resistor R_L, and is passed on to the next stage through C_5. Condenser C_4 keeps a.f. out of the power supply and also, in combination with resistor R_1, filters out any ripple from the power supply.

► In each of these C-bias detectors, the modulated signal is rectified because the grid of the tube is biased practically to cut-off—that is, to the point where the E_g-I_p characteristic makes a sharp bend. For this reason, a C-bias detector is often called a "plate-bend detector" or simply a "plate detector."

SQUARE-LAW DETECTION

All the detector circuits we have discussed so far have two common characteristics. In each, rectification of the modulated r.f. voltage has been complete (all negative half-cycles have been eliminated) and approximately linear (the envelope of the rectified pulses has been approximately the same shape as the envelope of the modulated carrier).

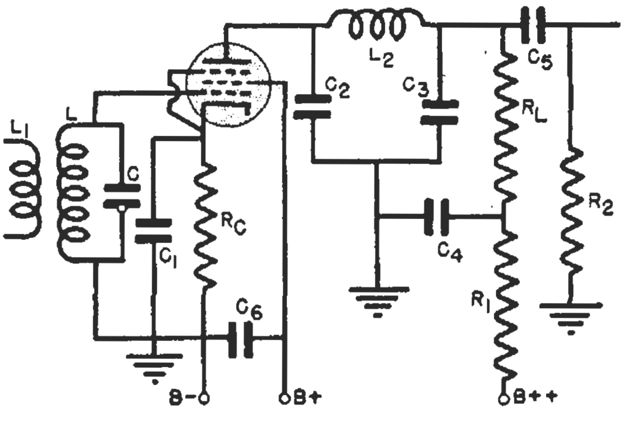

FIG. 26. A pentode C-bias demodulator.

It is possible to have a detector in which rectification is incomplete and non-linear. Suppose, for example, we have a triode which has a curved E_g-I_p characteristic like that shown in Fig. 27. Such a tube is said to have a "square law" characteristic, for its plate current is proportional to the *square* of the signal voltage applied to the grid. (That is, if the input signal is doubled, the output increases four times; if it is tripled, the output will be increased nine times, etc.)

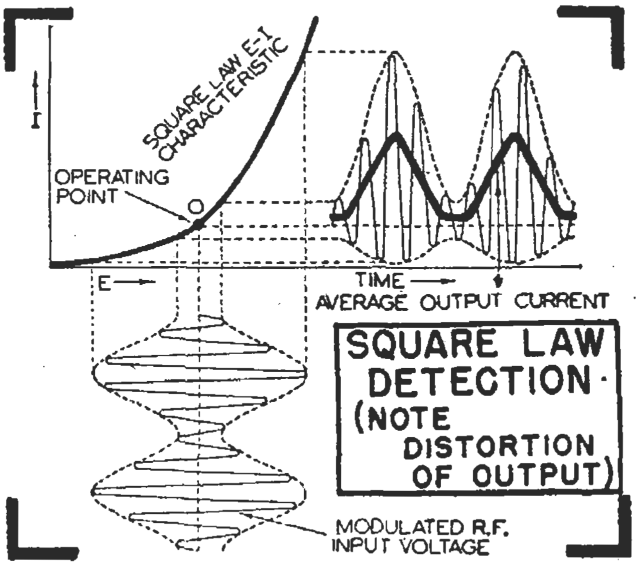

FIG. 27. This drawing shows how the square-law detector produces a distorted output signal.

Suppose, further, that we place this triode in a circuit like that in Fig. 24, and adjust the bias so that the tube will operate at point *O* in Fig. 27—the point where the E_g-I_p characteristic curves the most. If we now apply a modulated carrier to the input terminals of the stage, we will get the output shown in Fig. 27.

Here, each r.f. cycle has undergone incomplete rectification; each positive swing of the r.f. voltage has been increased, and each negative swing has been decreased, by the curved characteristic. Because of the incomplete rectification, the average value (a.f.) of the rectified current (shown by the heavy line in Fig. 27) does not have exactly the same wave form as the envelope of the positive current peaks.

This means that we will get a somewhat distorted reproduction of the original a.f. voltage when we send the tube output through the signal-separating circuits of the tube load. (The amount of distortion produced depends on the percentage of modulation of the carrier; it is inappreciable for modulations less than 20%, but it goes up to 25% for modulations of 100%.) However, such a detector has the advantage of being very sensitive, for its output current (and therefore its output voltage) is proportional to the *square* of the carrier voltage. Thus, even very weak signals can be made to give an appreciable output.

► The detector we just described is known as a C-bias square-law detector. The tube used does not have to be a triode; many pentodes also have such a characteristic, and can be used as square-law detectors. In fact, the rectifying device does not even have to be a tube: a galena crystal has a square-law characteristic when used as a rectifier, and, as we shall see later in this lesson, such crystals were widely used as square-law detectors in the early days of radio.

Because they produce distortion, and because modern amplifier circuits make sensitive detectors unnecessary, square-law detectors have practically disappeared as demodulators. However, they are modified into superheterodyne first detectors, and they still are used in measuring instruments and in radio applications where sensitivity rather than freedom from distortion is desired.

Combination Linear-Square Law Detectors. Many tubes, if their operating voltages are properly adjusted, can be made to have an E_g-I_p characteristic which is square law in shape near the bottom and nearly linear farther up. If we use such a tube in a detector circuit, and adjust the grid bias so that we operate near the point of greatest curvature of the characteristic, we can get a combination of linear and square-law detection. Strong signals will swing over the linear part of the characteristic, and will give practically distortionless detection. Weak signals, however, will swing over only the curved part of the characteristic, giving us square-law detection. We then get sensitive detector action, which is desirable for weak signals—but we must, of course, pay the price of greater distortion for it.

These combination detectors were once very popular, but, like square-law detectors, they have almost entirely disappeared from home radios as demodulators.

Heterodyne or Beat Detectors

The superheterodyne circuit requires two detectors; one is used as a demodulator to obtain the intelligence signal from its carrier (this is the second detector), and the other is used to produce the i.f. (this is called the first detector). This first or heterodyne detector is not used to demodulate the incoming signal; instead, it mixes the incoming and local oscillator signals to produce a beat frequency that is still modulated by the intelligence signal.

When two signals of different frequencies are mixed together and then fed into a detector, the resulting rectified current pulses will include the following components: the original frequencies; the sum of these frequencies; their difference; and various harmonics of all these. In the superheterodyne, we are interested in the difference frequency, which is called the intermediate frequency (abbreviated "i.f."). (This difference frequency is also known as a *beat frequency* or a *heterodyne frequency*, and the method by which it is produced is called *heterodyne detection.*)

HOW A HETERODYNE DETECTOR WORKS

The action of a heterodyne detector can be best understood by a study of the wave form curves in Fig. *28*. When two r.f. signals that differ in frequency are mixed together, such as the signals in Figs. *28A* and *28B*, the result is the complex wave shown in Fig. *28C*. (Here, the envelope of the wave represents the difference or beat frequency.) Notice that peak *a* is rounded, while the trough at *b* is sharp. Clearly, the envelope is not a sine wave.

If a voltage having the wave form shown in Fig. *28C* is sent through a linear detector, the resulting demodu-

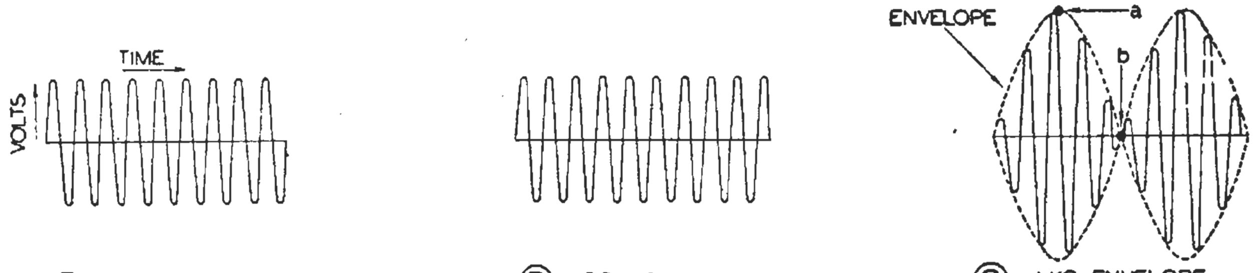

Ⓐ 1000 KC. Ⓑ 1001 KC. Ⓒ 1 KC. ENVELOPE

Ⓓ LINEAR DETECTION Ⓔ SQUARE LAW DETECTION

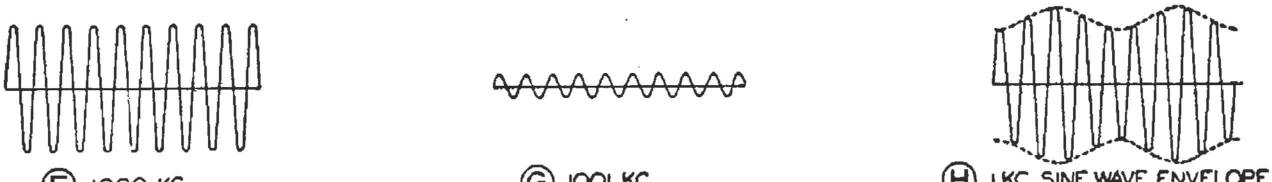

Ⓕ 1000 KC Ⓖ 1001 KC Ⓗ 1 KC. SINE WAVE ENVELOPE

FIG. 28. A comparison between the linear and the square-law heterodyne detectors.

lated current shown in Fig. *28D* is not sine wave in form. On the other hand, when the wave of Fig. *28C* is sent through a square-law detector, the sharp troughs of the demodulated signals are distorted by the detector characteristic, giving the sinusoidal output shown in Fig. *28E*. (Here we have a circuit introducing a distortion that compensates for another distortion!) Thus, when the amplitudes of the two signals being mixed are equal, the square-law detector gives a less distorted output than a linear detector.

► However, usually the signals mixed together are not equal in amplitude. Since the amount of heterodyne output depends on the amplitude of the two r.f. signals, the local oscillator output is generally made very strong so that the heterodyne output will be strong even if the incoming signal is weak. Usually the output from the local oscillator is made about 10 times the strength of the strongest expected incoming signal.

When the two r.f. signals differ this much in amplitude, the envelope of the mixed signal is practically a pure sine wave. For example, if the local oscillator signal is represented by Fig. *28F* and the incoming signal by Fig. *28G*, we will obtain the complex wave shown at Fig. *28H* when they are mixed. Either a linear or a square-law detector will give us a sine-wave output signal from this mixed signal, because it has a sine-wave envelope; therefore, under these conditions, we can use either kind of detector. You will study typical mixer-first detector stages in detail when you study the superheterodyne receiver.

Early Detector Types

We will now take a brief look at some of the early detector circuits. You'll find these no longer used much, but you will meet them occasionally.

CRYSTAL DETECTORS

Before the days of vacuum tubes, practically every radio receiver contained a crystal detector. Even today you can purchase "crystal sets" in many radio stores, for they give acceptable reception of local broadcasts with ample volume for headphone use.

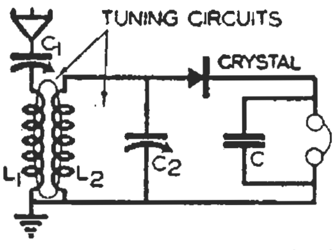

FIG. 29. A typical crystal detector.

Fig. *29* shows a crystal detector circuit that has been widely used. It is tuned by resonant circuits C_1-L_1 and C_2-L_2, which are inductively coupled. R.F. filtering is provided by condenser *C* and the resistance of the crystal, which form an R-C filter. The crystal is a one-way device; it passes current much better in one direction than in the other. Hence, it provides approximate half-wave rectification of the applied r.f. signal. The audio component of the rectified pulses operates the headphones. Thus, rectification takes place at the crystal, and signal separation occurs at the load (the headphones). There is no amplification in a crystal detector.

The crystals are generally galena, iron pyrites, silicon, carborundum, or combinations of these minerals. A fine phosphor-bronze wire, often called a "cat's whisker" because it was about as thin and springy as the whisker of a cat, was used originally to make contact with a sensitive spot on the crystal. This was a very delicate arrangement, for the slightest jar necessitated a resetting of the "cat's-whisker." More recently, fixed crystal detectors have been made by mounting a piece of carborundum permanently against a soft metal disc; these do not require adjustment, but are considerably less sensitive (give poorer rectification).

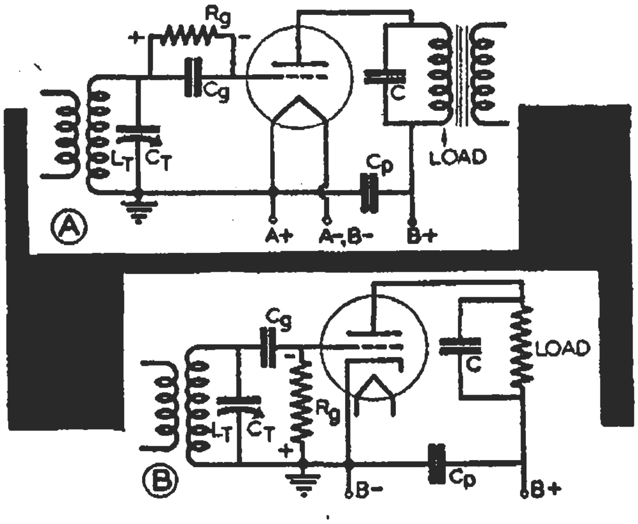

FIG. 30. Two forms of the grid-leak grid-condenser detector.

► In certain foreign countries where radio receivers are taxed according to the number of tubes they contain, crystals and special copper-oxide rectifiers (having elements about the size of a pinhead) are still used as detectors.

A recent development is the use of tiny fixed crystal units as detectors at micro-wave frequencies, where the effects of the transit time of electron flow through a tube make tube detectors unsatisfactory.

GRID LEAK-CONDENSER DETECTORS

The grid leak-condenser detector was one of the first detector circuits that used a vacuum tube, and was for many years one of the most popular. Two forms of this circuit are shown in Fig. *30;* both work in essentially the same manner.

We can consider the cathode and grid of the tube to be a diode in which the grid acts as an anode. Looking at the circuit from this viewpoint, you see at once that the cathode-grid circuit of the tube is really a simple diode detector. R_g and C_g form the signal separating load circuit, while the resonant circuit L_T-C_T is the means by which the modulated r.f. carrier voltage is introduced into the detector circuit. When a signal is fed in, it undergoes detection in this "diode" circuit, and an a.f. voltage similar in form to the envelope of the carrier is developed across load resistor R_g. (The resistor R_g is called a "grid leak," while C_g is known as the "grid condenser;" from these come the name for this detector type.)

The a.f. voltage across R_g is applied between the cathode and grid of the tube, and thus produces a.f. variations in the tube plate current. The r.f. input signal is also applied between the grid and cathode, so the tube plate current contains r.f. variations too. To keep the r.f. voltages out of the low-frequency amplifier, *C* is used in the plate circuit to form an R-C filter with the tube r_p. The a.f. component is amplified by the tube and appears across the plate load, ready to be fed to the a.f. amplifier.

Thus, a triode grid-leak detector acts like a diode detector to which one stage of audio amplification is added. Rectification and signal separation occur in the grid circuit; the a.f. produced is then amplified by the tube. Proper selection of the resistor R_g and condenser C_g will let the detector work as a square-law device for weak signals or as a linear detector for strong signals.

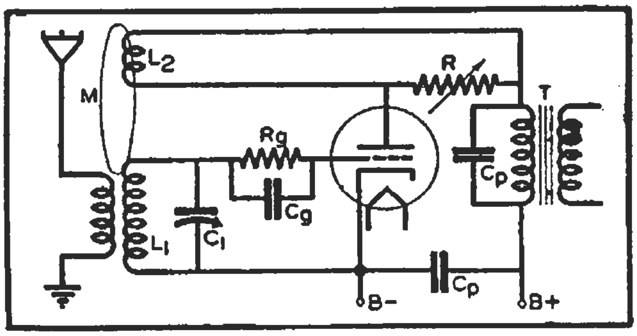

FIG. 31. A regenerative detector.

REGENERATIVE DETECTORS

Even more gain than that found in grid leak-condenser detectors was sought in the early days of radio. Inventors found a way of using the undesired r.f. voltage in the plate circuit —they put this component to work in a regenerative detector, in which the r.f. current *in the plate circuit* of the detector was fed back into the grid circuit to reinforce the incoming modulated r.f. carrier voltage. Naturally a means of controlling the amount of feedback was necessary, for excessive feedback resulted in oscillation and complete destruction of the modulation envelope of the carrier.

One form of regenerative grid leak-condenser detector circuit is shown in Fig. *31*. The grid circuit of the tube is exactly the same as that of the grid leak-condenser detector, but the plate circuit contains a coil L_2 through which the r.f. plate current flows. This induces the desired amount of r.f. voltage in the grid tank circuit, through mutual inductance *M*. Variable resistor *R*, connected across the feedback coil, controls the r.f. current flow through the coil and so determines the amount of feedback. (Some receiver builders controlled the amount of feedback by varying the mutual inductance between coils instead of by varying *R*.)

The energy fed back from the plate circuit, in effect, reduces the losses in the grid circuit, so a far greater resonance step-up is obtained.

A regenerative detector has some good features, but also has several disadvantages. It is quite selective for the carrier frequency being tuned in, but attenuates side-band frequencies and produces severe frequency distortion. (For code reception and reception of ordinary speech, this frequency distortion is not at all objectionable; hence, regenerative detectors may still be found in certain communications receivers.) Furthermore, a regenerative circuit goes into oscillation quite easily, especially when condenser C_1 is adjusted from a low to a high frequency. If no r.f. stage is used ahead of the detector, the resulting oscillations are radiated by the receiving antenna just as if the receiver were a small transmitter, and interference is created in neighboring receivers. In addition, an annoying squeal is usually heard from the receiver itself, for the frequency of oscillation generally differs only slightly from the frequency of the desired incoming signal, and the resulting beat frequency is an audio frequency.

Super-Regenerative Detectors. A regenerative detector is "supersensitive" (has its greatest sensitivity) when just on the verge of going into oscillation. However, when it is in this condition, small increases in carrier input will set the circuit into oscillation; once this occurs, decreases in carrier intensity will not stop the oscillation.

This difficulty was eliminated with the super-regenerative detector, a circuit based upon the principle that it takes a certain amount of time for a detector to go into oscillation. If the feedback can be reduced quickly enough during this interval of time, oscillation can be prevented. Feedback can be reduced temporarily either by increasing the negative C bias in the grid circuit or by decreasing the plate voltage. Either can be accomplished by introducing into the regenerative detector circuit *a varying voltage,* which may be sinusoidal in wave form, and which is known as the *quenching signal.* The quenching frequency must be somewhat higher than the intelligence signal frequencies; otherwise, it would create interference. For code and speech reception, a quenching frequency of between 10 and 20 kc. is quite satisfactory.

A super-regenerative detector circuit, in which the tube acts both as a regenerative detector and as an oscillator for producing the quenching frequency, is shown in Fig. *32.* Resonant circuits C_2-L_2 in the grid circuit and C_3-L_3 in the plate circuit act in conjunction with the tube as an oscillator, with feedback provided either by the grid-to-plate capacity of the tube or by mutual induction between coils L_2 and L_3. The circuit can be tuned to maximum sensitivity without any danger that a carrier increase will send it into audible oscillation, for the inaudible quenching signal always reduces the plate voltage before the tube has time to break into oscillation at the incoming signal frequency.

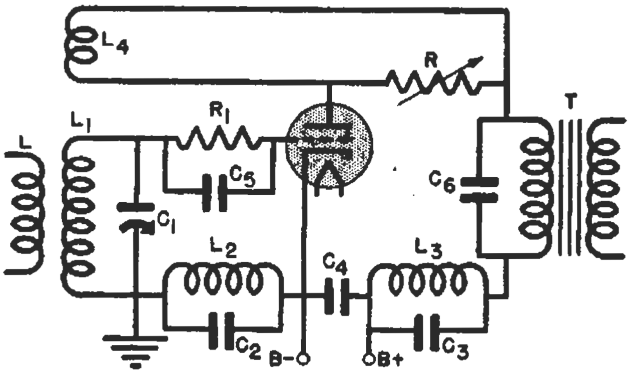

FIG. 32. One of the super-regenerative circuits.

Of course, a separate oscillator may be used to produce the quenching frequency; this is often done in order to secure independent control of the quenching signal.

Demodulators for F. M. Receivers

So far, the detectors described have been intended to handle amplitude-modulated (a.m.) signals. To complete our study of detectors, we must also consider the fundamentals of detectors intended for frequency-modulated (f.m.) signals. Of course, we shall give more information on these later, when we discuss the complete f.m. receiver. For now, we shall present basic circuits so you can compare the detectors used in the two modulating systems. You may be surprised to see how little difference there is between *basic* circuits—a change in a part value here, or a different operating voltage there, may be all that is needed to make an a.m. stage into an f.m. stage. Again, you will see the value of understanding clearly how parts and circuits work.

► What is the difference between a.m. and f.m.? Essentially, amplitude modulation is a system in which the *amplitude* of an r.f. voltage is varied by an intelligence signal: the *amplitude* variation being proportional to the *amplitude* of the intelligence signal, and the *rate* of variation being proportional to the *frequency* of the intelligence signal.

In frequency modulation, *the amplitude of the r.f. signal remains constant*—the *frequency* is varied by the intelligence signal. Here, the *frequency* variation is proportional to the *amplitude* of the intelligence signal (louder sounds produce a wider frequency change), while the *rate* of frequency variation is proportional to the frequency of the intelligence signal.

Thus, in a.m., the *amplitude* changes of the intelligence signal produce *amplitude* changes in the carrier; while in f.m. the *amplitude* changes of the intelligence signal produce *frequency* changes in the carrier.

► A tube is an amplitude-following device—the larger the input signal amplitude, the greater the resulting current. Hence, a.m. detectors produce an intelligence signal output that varies directly with the amplitude changes of the incoming r.f. signal.

On the other hand, the f.m. wave has a constant amplitude; there is no way in which a *tube* can produce an intelligence signal with a varying amplitude from such an r.f. signal. (The tube responds equally well to all r.f. signals over a wide range, as its output is relatively independent of r.f. frequency.) Therefore, it is necessary to add another step to ~~the process~~ of f.m. demodulation. *WE MUST FIRST CONVERT THE F.M. SIGNAL TO ONE WITH A VARYING AMPLITUDE BEFORE WE CAN DEMODULATE THE SIGNAL.* This is ~~the fundamental~~ difference between a.m. and f.m. demodulators. Let's see how the conversion is made.

A BASIC F.M. DEMODULATOR

To convert an f.m. wave into one having a.m. characteristics, we must have a circuit or device that can *discriminate* between frequencies. That is, the circuit must give different output voltages for different frequencies. (As discrimination is a necessary step in f.m. detection, the f.m. detector stage is commonly called a *discriminator stage.*)

Frequency discrimination is obtained by the use of L-C resonant circuits. Let's look at several systems of discrimination, as differences in the methods of discrimination are the major points of difference between f.m. demodulators.

► Let's suppose we have an L-C circuit with a resonance curve like that shown in Fig. 33. Notice that the L-C values of this circuit cause best response to the resonant frequency, which is 100 kc. It responds less well to frequencies of 90 kc. and 110 kc., and rather poorly to frequencies of 80 kc. and 120 kc.

► In an a.m. detector, we tune the L-C circuit to the frequency of the carrier in which we are interested; we then get maximum response from this frequency while nearby carriers are rejected. We depend on the modulation to give the varying amplitude signal needed for the proper operation of the detector.

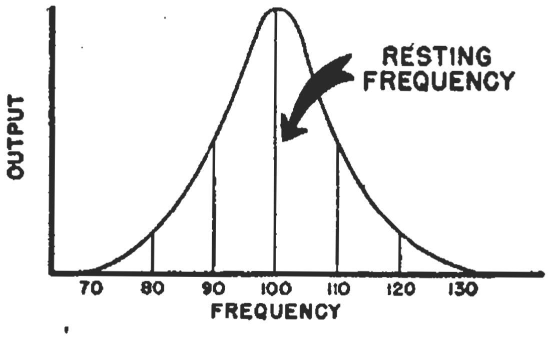

FIG. 33. A response curve for a resonant circuit.

The "carrier" in an f.m. system is called the "resting frequency." This is the frequency transmitted when there is no modulation. When modulation occurs, the frequency of the transmitted wave varies above and below the resting frequency. *Now, if we feed an f.m. signal into this same tuned circuit, and the circuit is tuned exactly to the resting frequency, then we will not get the desired results.* As the modulation swings the frequency up and down, we will get a variation in amplitude, but it will be always in the same direction—downward.

For example, if the resting frequency is 100 kc., and it is applied to an L-C circuit tuned to this frequency, it will get the maximum resonance step-up. When the signal frequency swings up to 110 kc., we will get less output (see Fig. 33). On the other hand, when it swings down to 90 kc. we will also get less output. Therefore, we are not reconstructing the desired a.c. cycle; we want the output to go down when the frequency changes in one direction, and to go up when it swings in the other direction.

► However, we can use this same circuit if we tune it to resonance at a frequency higher than the resting frequency, as shown in Fig. 34. Under these conditions, the output for the 100-kc. resting frequency is not as great as the output for the 110-kc. signal. On the other hand, the output for 100 kc. is greater than the output for 90 kc. Therefore, variations in frequency above and below the resting frequency will give us variations in amplitude.

For example, when the incoming frequency increases toward 110 kc., we will get a greater output from the resonant circuit and hence a greater voltage from the detector. On the next half-cycle, when the incoming signal swings downward in frequency towards 90 kc., we will have a smaller input to the detector, and thus obtain a reduced output. Thus, as the frequency changes above and below the resting frequency, we obtain a *varying amplitude* signal. Also, the greater

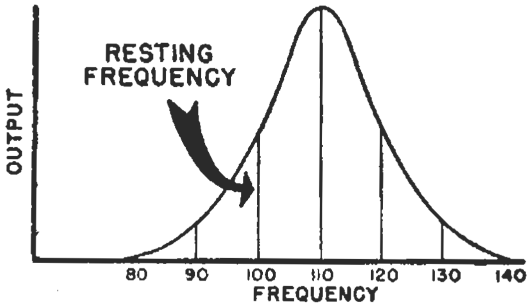

FIG. 34. The response curve of Fig. 33, with the circuit tuned to another frequency.

the frequency change from the resting value, the greater the amplitude variation and, hence, the greater the output. In other words, an ordinary resonant circuit that is *not* tuned to the resting frequency will convert an f.m. wave into an a.m. wave, which we can then demodulate in the usual manner.

► Actually, a simple f.m. demodulator could be made from *any* diode circuit just by changing the resonant point of the tuned circuit at its input. However, this is not the system used in commercial receivers. There are alignment problems, and it is difficult to design a resonant circuit with a response curve that is straight enough to give freedom from distortion. Let's go on and look at commercial systems.

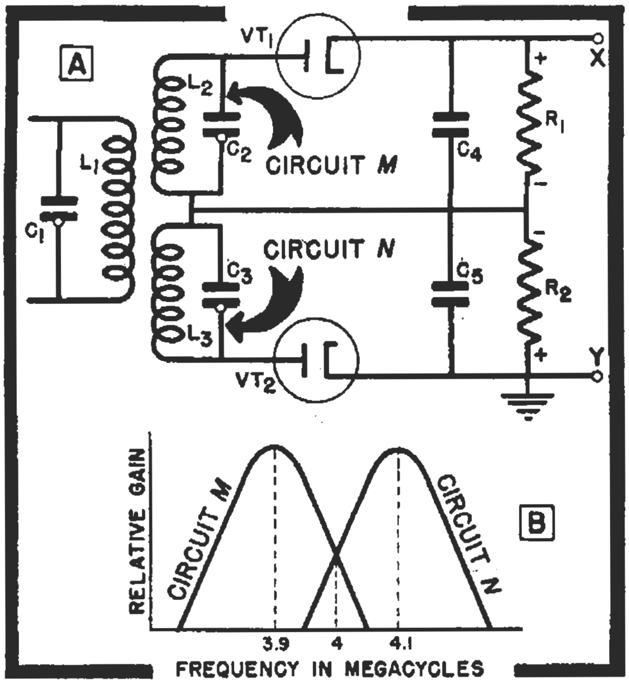

FIG. 35. An f.m. discriminator that used two resonant circuits.

DUAL L-C SYSTEM

Fig. *35A* shows one commercial adaptation of the principles we have just described. The circuit works as follows:

Resonant circuit L_1-C_1 is tuned to the i.f. resting signal, but it is designed with a low Q so that it is sufficiently broad to respond well to frequencies on both sides of this value. This circuit induces voltages in both L_2 and L_3; these voltages cause electrons to flow through diodes VT_1 and VT_2.

Since electrons move only from the cathode to the plate, electrons flowing through VT_1 come "upward" through resistor R_1, producing a voltage drop across this resistor with the polarity shown. Similarly, electrons flowing through VT_2 move "downward" through resistor R_2. The voltage drop across this resistor is, therefore, of opposite polarity to that across resistor R_1.

The resonant circuit M (L_2-C_2) is tuned to a frequency somewhat lower than that of L_1-C_1, *while* N (L_3-C_3) is tuned to a frequency somewhat higher. If the frequency of 4 mc. in Fig. *35B* represents the L_1-C_1 resonant frequency (the resting frequency), then 3.9 mc. may represent the resonant frequency of M and 4.1 mc. that of N. Hence, neither M nor N is tuned to *favor* the center frequency, although neither *excludes* signals of this frequency altogether.

The circuits are adjusted so that, at the resting frequency, the voltages applied to VT_1 and VT_2 are equal, and equal currents flow through R_1 and R_2. As these are equal resistances, their voltage drops are equal under these conditions. Further, since their voltage drops are opposite in polarity (see Fig. *35A*), there is no net voltage between terminals X and Y when only the resting frequency is fed into the stage.

► Now let us suppose the signal frequency is modulated so that it swings from 4 to 3.9, back through 4 to 4.1, then back toward 3.9, etc.

As the frequency approaches 3.9 (the resonant frequency of M — see

Fig. *35*), more voltage will be developed by M. This causes larger voltages to be applied to VT_1; larger currents result and produce larger voltages across R_1. At the same time, the signal frequency is moving *away* from the resonant frequency of N, so less voltage is being applied to VT_2. The resulting smaller current produces less voltage across R_2. Hence, for this swing, the voltage across R_1 increases while that across R_2 decreases. The two voltages no longer cancel one another, so a net voltage (equal to the difference between them) appears between terminals X and Y.

For example, suppose the R_1 and R_2 voltages are initially 50 volts each, and cancel exactly. On the swing just described, the R_1 voltage may go up to 90 volts and the R_2 voltage may go down to 10 volts. The difference is 90 minus 10 or 80 volts, which will appear between X and Y. (Terminal X will be positive with respect to Y, as the polarity will be that of the voltage across resistor R_1.)

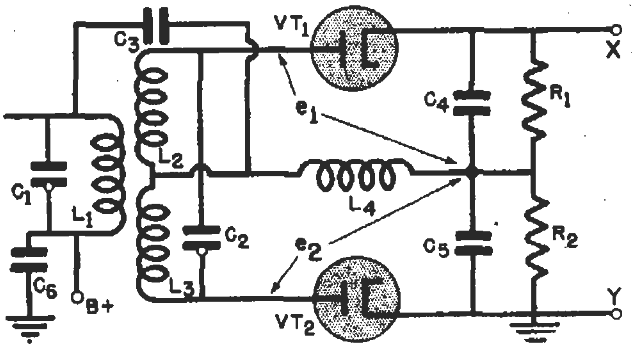

FIG. 36. This phase-operated f.m. discriminator is the type most commonly used.

When the swing reverses toward 4.1 mc., exactly the reverse action occurs. Now, N develops the larger voltage, VT_2 passes the larger current, and the drop across R_2 is larger than that across R_1. This reverses the polarity of the difference voltage existing across X and Y, since the polarity now is that of the voltage across R_2.

Summary. A signal, shifting in frequency, is introduced into this stage. The frequency variations produce a varying voltage across terminals X and Y. Small frequency changes produce small voltages, as frequencies near 4 mc. do not "climb" as high on the M and N resonance curves. Larger changes, out to the limits set by the resonance points (3.9 and 4.1 in Fig. *35B*) produce larger voltages. Thus, we have a circuit that produces an amplitude variation from the varying frequency signal.

This same circuit also gives us demodulation in the same manner as the diode detector we have discussed for amplitude-modulated signals. The diodes VT_1 and VT_2 rectify the r.f. signal, while condensers C_4 and C_5 act as r.f. filters. Thus, the original intelligence signal appears across terminals X and Y.

A PHASE-OPERATED DISCRIMINATOR

Fig. *36* shows the most widely used f.m. demodulator. The circuit is very similar to that of a push-pull a.m. detector described earlier in this lesson, except for the arrangement made to obtain frequency discrimination.

Complete details on the operation of this circuit will be given in a later lesson. Briefly, here's how it works:

L_1 is the primary, and L_2 and L_3 are the two halves of the secondary, of a center-tapped i.f. transformer. (L_2 and L_3 are actually parts of the same secondary coil; we've given them separate names just for convenience in reference.) The circuit L_1-C_1 is tuned to resonance at the resting frequency, as is also the circuit L_2-L_3-C_2. A choke coil L_4 is connected to the center point of the transformer secondary, and also (through condenser C_3) to the top of the primary L_1. This coil L_4 is in the common plate return of both diodes.

If you trace the circuit from the top of L_1 through C_3, L_4, and C_5 to ground, and from ground through C_6 to the bottom end of L_1, you will see that L_4 is effectively in parallel with the primary L_1. (We can ignore the condensers, because their reactances are negligible at f.m. frequencies.) Therefore, the primary voltage across L_1 is also always across L_4, and we can call the voltage across L_4 the "primary voltage" for convenience.

At any time, the voltage applied to the plate of diode VT_1 is the sum of the voltage across L_2 and the primary voltage across L_4. Similarly, the voltage applied to the plate of VT_2 is the sum of the voltage across L_3 and the primary voltage across L_4. These must be *vector* sums, since the voltages across these coils are not in phase.

This circuit is so arranged that when the resting frequency is fed in (that is, the frequency to which the tuned circuits are resonant) the voltage across L_2 is 90° out of phase with the primary voltage. The voltage across L_3 is then also 90° out of phase with the primary voltage, but in the opposite sense. Say we assume that the L_2 voltage *leads* the primary voltage by 90°; the L_3 voltage will then *lag* the primary voltage by 90°. The vector sum of the L_2 voltage and the primary voltage will then be of the same magnitude as the vector sum of the L_3 voltage and the primary voltage. Therefore, when the resting frequency is applied to this circuit, the total voltage applied to the plate of each diode is the same. That is, the voltage e_1 for VT_1 will equal voltage e_2 for VT_2. Equal voltages cause the diodes to pass equal currents through R_1 and R_2. Since the resistances are equal, their voltage drops are equal and opposite, so no net voltage appears between terminals X and Y.

► However, the two plate voltages do not remain the same when a modulated signal is fed in. As you know, a resonant circuit changes its characteristics when a signal other than the resonant frequency signal is applied to it. If an above-resonance frequency is applied, the circuit acts like a *coil;* if a below-resonance frequency is applied, the circuit acts like a *condenser*. In other words, *the phase of the circuit voltage changes when an off-resonance frequency is applied.*

When a modulated signal is applied to our discriminator circuit, phase changes occur both in the primary voltage and in the voltages across L_2 and L_3. The amount of phase change will depend on how far from the resting frequency (how far off-resonance) the modulated signal swings. We might have, say, a total shift of 45°. The L_2 voltage might then lead the primary voltage by 135° (90° plus 45°); the L_3 voltage would then lag the primary voltage by only 45° (90° minus 45°).

Obviously, under these conditions the vector sum of the L_2 voltage and the primary voltage is not equal to the vector sum of the L_3 voltage and the primary voltage. Thus, the phase shift causes unequal plate voltages to be applied to the diodes. Therefore, the

R_1 and R_2 currents are unequal and a net voltage appears between terminals *X* and *Y*. This voltage becomes larger the farther the f.m. signal swings from the resting frequency, and reverses in polarity as the signal swings above and below the resting frequency. It is, therefore, the amplitude-modulated signal we want. Detection of this a.m. signal occurs as it does in the circuit in Fig. *35;* the diodes rectify the r.f., and condensers C_4 and C_5 act as r.f. filters, so the intelligence signal appears across terminals *X* and *Y*.

► Don't worry if all the details of these f.m. circuits aren't perfectly clear to you now—we will discuss f.m. receivers thoroughly in later lessons. Even now, though, you can see that f.m. sets are not tremendously different from a.m. receivers. In fact, except for the addition of the frequency discriminator and the use of a circuit called a *limiter,* the f.m. receiver is designed very similarly to a wide-band high-fidelity a.m. receiver. And, as we have just shown, the f.m. signal must be converted into an a.m. signal at the detector before we can obtain it. The f.m. system of modulation has certain advantages; notably, high fidelity capabilities and, when a limiter stage is used, a remarkable freedom from noise.

Reviewing Methods of Providing C Bias

Now that we have studied nearly all the basic vacuum tube circuits, let us review the different ways of providing the negative operating C bias required in a.f. and r.f. amplifiers, detectors, oscillators—in fact, in any vacuum tube circuit. You are already familiar with most of these methods, but we will review them briefly here to give you a complete picture.

You will recall that a grid bias is a voltage applied to the grid to fix the operating point of the tube at the proper point on the characteristic curve. It is possible to get an entirely different operating action from a radio stage just by varying the bias voltage. For example, you know that a class A amplifier — the kind most commonly used in receiver circuits — has a bias voltage that makes it operate on the straight portion of its characteristic. The bias keeps the grid negative at all times (providing the signal level is not excessive) so it will not draw grid current.

If we increase the bias enough so that the tube plate current is practically zero (in other words, if we bias the tube almost to cut-off), we have class B operation. We use class B stages in push-pull audio amplifiers, in transmitters, and as detectors.

Increasing the bias still further (well beyond cut-off) will give us class C operation. A class C amplifier is a highly efficient circuit used only for r.f. power amplification and for oscillatory circuits.

► Obviously, the bias voltage is important to the operation of the tube stage. We can secure bias in various ways: we can use a battery, or arrange a self-bias circuit in which plate, filament, or grid current provides the bias voltage;* or we can use fixed

---

*A.V.C., an automatic C bias dependent on signal level, is not included in this review, but will be described in a later lesson.

bias circuits in which the bias voltage is obtained from the power supply. Any of these methods can be used with any tube which has a grid.

BATTERY BIAS

Fig. *37* shows several methods of supplying a bias voltage from a battery. Exactly the same method is shown in *A* and *B*, except that *A* shows a tube with a filament type cathode, while *B* shows a tube with a separately heated cathode.

As you see, the C battery is connected in the grid return circuit.

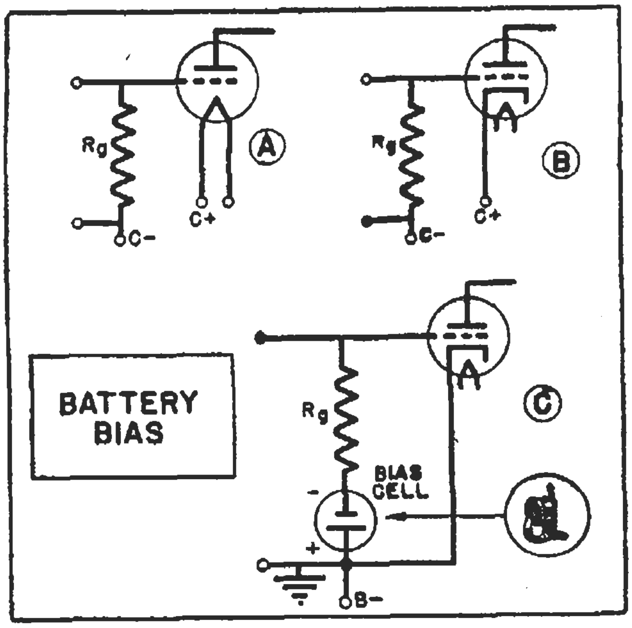

FIG. 37. Several methods of using batteries to furnish bias.

Hence, its voltage appears between the grid and cathode, and thus sets the operating characteristics of the tube.

► Since the grid is made negative by the bias voltage, no grid current flows. Therefore, the bias voltage causes no current flow through R_g, so this resistor does not enter into the biasing arrangement in these or any succeeding diagrams. The sole purpose of R_g is to provide a load across which signal voltage can be developed. (When signals are applied, there will be a signal current through R_g that will cause a signal voltage drop across this resistor. This signal voltage will alternately add to and subtract from the bias voltage, swinging the grid voltage above and below the operating point.)

► In Fig. *37C*, a bias cell is shown in use. A bias cell is actually a very small chemical-cell battery. Two types of bias cells are available; one type is rated at 1 volt while the other gives 1¼ volts. Any reasonable bias voltage can be obtained by placing several in series. However, it is rare to find more than two used in a radio receiver.

The advantages of the bias cell are that it is small in size and that it can be wired into the circuit as a semipermanent part of the circuit, since it does not require frequent replacement. Of course, the cell must be used properly to have reasonable life. Never try to measure the voltage of a bias cell with a voltmeter, because the current drawn by the meter may damage the cell. If you suspect that a bias cell is defective, remove it and substitute another, or a battery, in its place. You can determine whether the original is defective by observing the operation of the stage when the substitute is being used.

SELF-BIAS METHODS

There are a number of biasing methods that depend upon plate, filament, or grid current flow. Let's take each up in turn.

Plate Current Methods. Fig. *38* shows several methods whereby the average d.c. plate current flow through a resistor produces a voltage that can be used for bias purposes.

In Fig. *38A*, the plate current flows through resistor R_c. (Electrons flow from the cathode to the plate, through

R_L, through the B supply, and through R_c back to the cathode.) As a result, a voltage drop that has the polarity shown in this figure exists across R_c Since resistor R_c is between the grid and cathode, the voltage across it is also between the grid and cathode. This voltage makes the grid negative.

We can adjust this bias to the required amount by choosing the proper value of resistance for the plate current of the tube.

The condenser C_c by-passes the bias resistor. This prevents any of the a.c. signal voltage from being lost in R_c, and also prevents the plate circuit a.c. voltage from causing degeneration in the grid circuit.

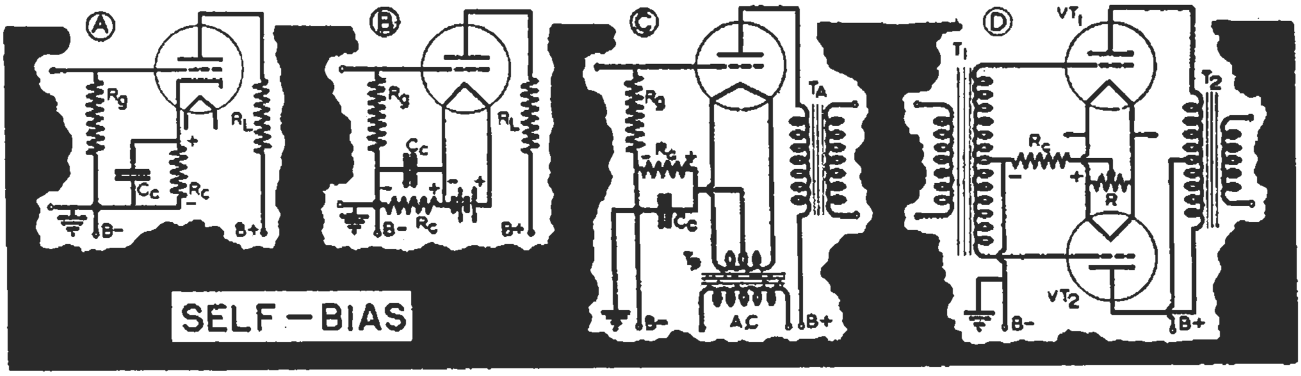

FIG. 38. Typical self-bias circuits.

► Fig. *38B* shows the same kind of circuit for a tube using the filament as the cathode. It operates precisely the same way.

► Fig. *38C* shows a similar arrangement for a tube with an a.c.-operated filament type cathode. In this case, there is a center tap on the filament winding. The plate electrons flow from the cathode to the plate, through the primary of transformer T_A, through the B supply, and through R_c to the center tap on the filament winding, then back to the filament.

► *38D* shows the same arrangement for a push-pull stage. Here the plate currents of both tubes flow through R_c to the center-tapped resistor R, from which the plate current flow passes to the filament. In this case, remember that the current is doubled, since it comes from two tubes. As a result, the bias resistor should be half the size that is necessary for a single tube to produce the same bias voltage.

Filament Current Methods. Fig. *39* shows how the filament current can be used with battery type tubes to supply a bias. (We cannot use the filament current of a.c.-operated tubes as a bias source, because the filament current variations would introduce a 60-cycle variation in the plate current, producing hum. We cannot permit variations in the bias, so we can get bias only from a d.c. source.)

In Fig. *39A*, electrons circulate from the battery through resistor R_F, through the filament, and back to the battery.

► The amount of bias depends on the reference point used. There are two systems of reference points used with these battery type tubes. As you know, there is a voltage drop along the filament wire, caused by its resistance, so that different points on the filament are at differing potentials with respect to the grid. Thus, the grid is far more negative with respect to one end of the filament than it is with respect to the other.

Formerly, the middle of the filament was taken as the bias reference point. Following this system, the bias voltage in Fig. *39A* will be half the filament voltage drop, plus the drop across the resistor R_F. This adds up to a bias of 3.5 volts. However, modern practice has been to assume that the negative side of the filament is the reference point, in which case the 1-volt drop across resistor R_F is the bias voltage.

► In Fig. *39B*, we have a filament string so arranged that the drops across the tube filaments become bias voltages. Let's see how this circuit works. We will consider the negative filament terminals to be the bias reference points.

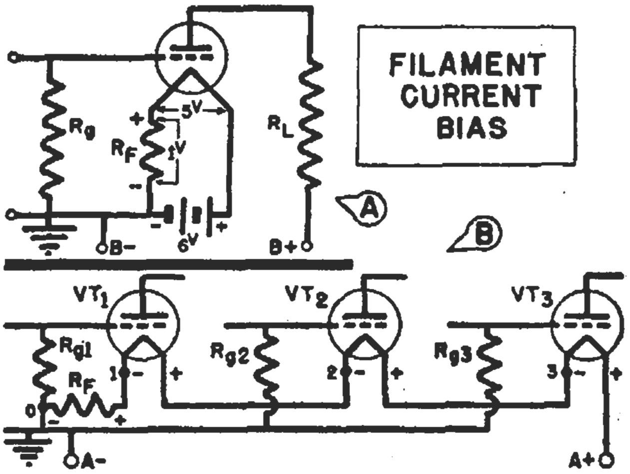

FIG. 39. How the filament current can be made to supply bias.

The filament electrons move from A–, through the resistor R_F, through the filament of tube VT_1 then through the filaments of VT_2 and VT_3, to the A+ terminal. As far as tube VT_1 is concerned, the only bias voltage between its negative terminal (terminal *1*) and its grid is the drop across the resistor, R_F. This, then, is the bias for VT_1.

Now let's look at VT_2. The voltage between its grid circuit and point *2* on the filament string includes both the drop across R_F and that across the filament of tube VT_1. Therefore, this tube gets a higher bias, because its grid resistor R_{g2} returns to the point *0* on the filament string.

Similarly, tube VT_3 has a bias equal to the drop across R_F plus the drops across the filament of VT_1 and the filament of VT_2. In other words, the bias for this tube is equal to the sum of the drops between the return point of its grid resistor R_{g3} (point *0*) and point *3* on the filament string.

Thus, by including more and more of the series filament voltage drops, the bias voltage on succeeding tubes can be increased. Or, we can adjust the bias by returning the grid resistor of each tube to the desired point on the string.

Grid Current Methods. You are already familiar with the fact that grid current flow through a grid leak resistor will provide a bias voltage. The method is shown in Fig. *40A*. Whether the grid resistor is at R_{c1} or at R_{c2}, the same effect is obtained. In either case, the signal voltage swings the grid positive to a sufficient extent for grid current to flow. The grid current flow through the resistor then provides the bias voltage.

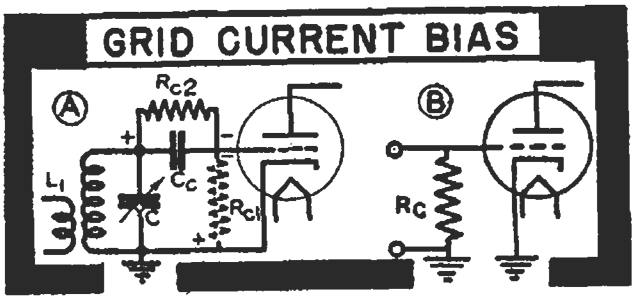

FIG. 40. The grid current can be used for bias purposes, as shown here.

► A modern adaptation of this method is shown in Fig. *40B*. Here, resistor R_c appears to be the usual grid resistor, used only as the load across which we develop a signal voltage. However, if we make this grid resistor very high in value, the tiny amount of convection current that normally flows through any tube will set up a small bias voltage. (Convection current is the small grid current caused by some of the electrons speeding toward the plate happening to strike the grid wires. As these electrons are caught, they make the grid negative with respect to the cathode, so they tend to drift back to the more positive cathode through the grid circuit.) For some tubes, particularly certain first audio tubes, the bias developed in this manner is sufficient for normal operation.

Notice the difference between the circuits in Figs. *40A* and *40B*. In *B*, the bias is due to stray electrons, which are captured by the grid and cause an extremely small grid current flow through a very high resistance. (R_c may be 10 to 20 megohms.) In this case, the tube has a bias whether or not a signal is applied. In Fig. *40A*, however, bias exists only when a signal is applied.

FIXED BIAS METHODS

Most of the self-bias methods are self-regulating—that is, the bias goes up when the tube current increases, and down when it decreases, and so tends to correct for variations in tube characteristics. This is usually an advantage, but not always; in fact, in some circuits self-bias is undesirable for precisely this reason. There are other circuits in which it is impossible to use self-bias. For such circuits, we must use fixed bias sources—either batteries, which we have already discussed, or the set power supply. Fig. *41* shows several different ways in which a bias voltage can be obtained from the power supply.

In Fig. *41A*, we have a combination of self and fixed bias. The plate current of the tube flows through R_3 which provides a certain amount of self biasing. In addition, there is an electron path from B— through R_3, bleeder resistor R_2, and the screen supply resistor R_1 to B+. This extra bleeder current makes the current flow through R_3 higher than the plate current value and increases the voltage drop across it. Thus, we can get the required bias with a smaller value of resistor R_3. Also, if we adjust the bleeder resistor R_2 properly, we can make the bias voltage depend primarily on the bleeder current rather than on the tube plate current. The bias then becomes at least semi-fixed, as it does not depend so much on the tube characteristics.

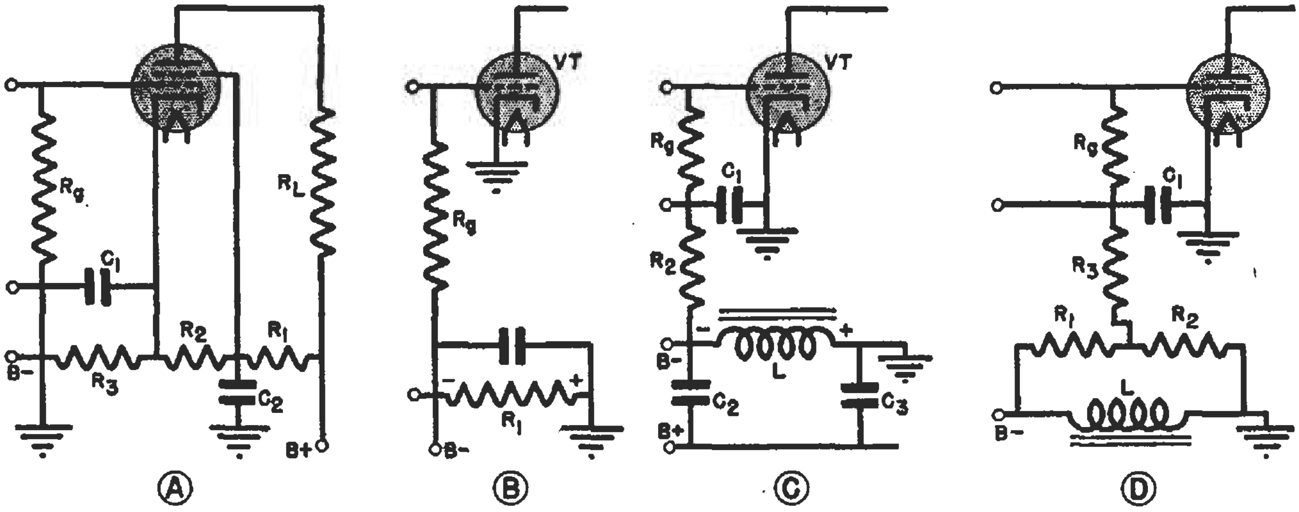

FIG. 41. When a fixed bias is needed, it can be obtained from the power supply by any of these methods.

► Fig. *41B* shows another combination of self and fixed bias. The plate currents of all the tubes flow through R_1. The resulting voltage drop is used to bias *VT*.

► Fig. *41C* is similar to Fig. *41B*, except that *L* in *41C* replaces R_1 of *41B*. In this case, the filter choke (or the speaker field being used as a choke) is in the negative side of the power supply. The drop across its d.c. resistance becomes the bias for *VT*. As there is also a large a.c. drop across the inductance *L*, a filter R_2-C_1 is used to prevent the a.c. components from reaching the grid.

► When the speaker field is used as a choke, the drop across it is usually larger than is required for bias purposes. In some cases a tap is placed on the field so that a portion of the drop may be used. The connections will then be similar to those shown in Fig. *41C*, except that R_1 will go to the tap of *L* instead of its B— terminal.

Another arrangement uses a voltage divider like that shown in Fig. *41D*. Resistors R_1 and R_2 divide the d.c. voltage drop across *L*, and the portion of the voltage across R_2 becomes the bias. The amount of bias can be adjusted by properly choosing the values of R_1 and R_2. These resistors have high values so they will not reduce the effectiveness of *L* as a filter. (High values are possible because no d.c. current flows in the grid circuit.)

► As you will notice, most of the fixed bias methods also are self bias systems to a certain extent. However, if the bleeder current, or the current from the other tubes, is a large portion of the current through the bias resistor (or coil), then the bias will be relatively fixed.

Lesson Questions

Be sure to number your Answer Sheet 17FR-3.

Place your Student Number on *every* Answer Sheet.

***Send in your set of answers for this lesson immediately after you finish them,* as instructed in the Study Schedule. This will give you the greatest possible benefit from our speedy personal grading service.**

1. What are the two steps involved in the demodulation (detection) of an a.m. signal?

2. What are the three performance characteristics on which detectors are rated?

3. Does a diode give better fidelity on: *1*, strong signals: or *2*, weak signals?

4. What would happen to the higher audio frequencies if the value of the detector load resistance is increased (in a diode detector circuit)?

5. What use is made of the d.c. component of the load voltage developed in diode detector circuits?

6. Across which one of the following condensers in Fig. *21* is there negligible r.f. or a.f. voltage: C_2; C_3; C_5?

7. In the television detector shown in Fig. *22*, what furnishes the filtering capacity?

8. In a triode grid-leak detector, does rectification occur: *1*, in the plate circuit; or *2*, in the grid circuit?

9. What step, prior to rectification and signal separation, must be performed in an f.m. demodulator?

10. How does the tube in Fig. *40B* get its C bias?